PARTS INDEX

For Lathes From Serial No. 600342 To 602127

Cabinet 18.1
Bed 19.1
Headstock Casting and Gear Train Guard 20.1
Headstock 21.1
Quick-Change Gear Box 22
Gear Train 23
Electrical Assembly 24
Countershaft 25.1
Countershaft with Clutch and Brake 26.1
Motor Base Assembly 27
Variable Speed Control 28
Variable Speed Motor Pulley 29.2
Cross Slide 30.2
Carriage 31
Apron ..... 32 & 33.1
Tailstock 34.2

INSTRUCTIONS FOR ORDERING REPAIR PARTS

It is important to furnish the following information in addition to QUANTITY required:

1. PART NUMBER
2. PART NAME
3. MODEL and SERIAL NUMBER of machine tool -- you'll find both on the metal plate attached to machine -- note illustration below.

NOTE: Screws and nuts shown without part numbers should be purchased locally.

We reserve the right to make changes in design and specifications without notice.

SERIAL NO.
600342 TO 602127

CABINET ASSEMBLY

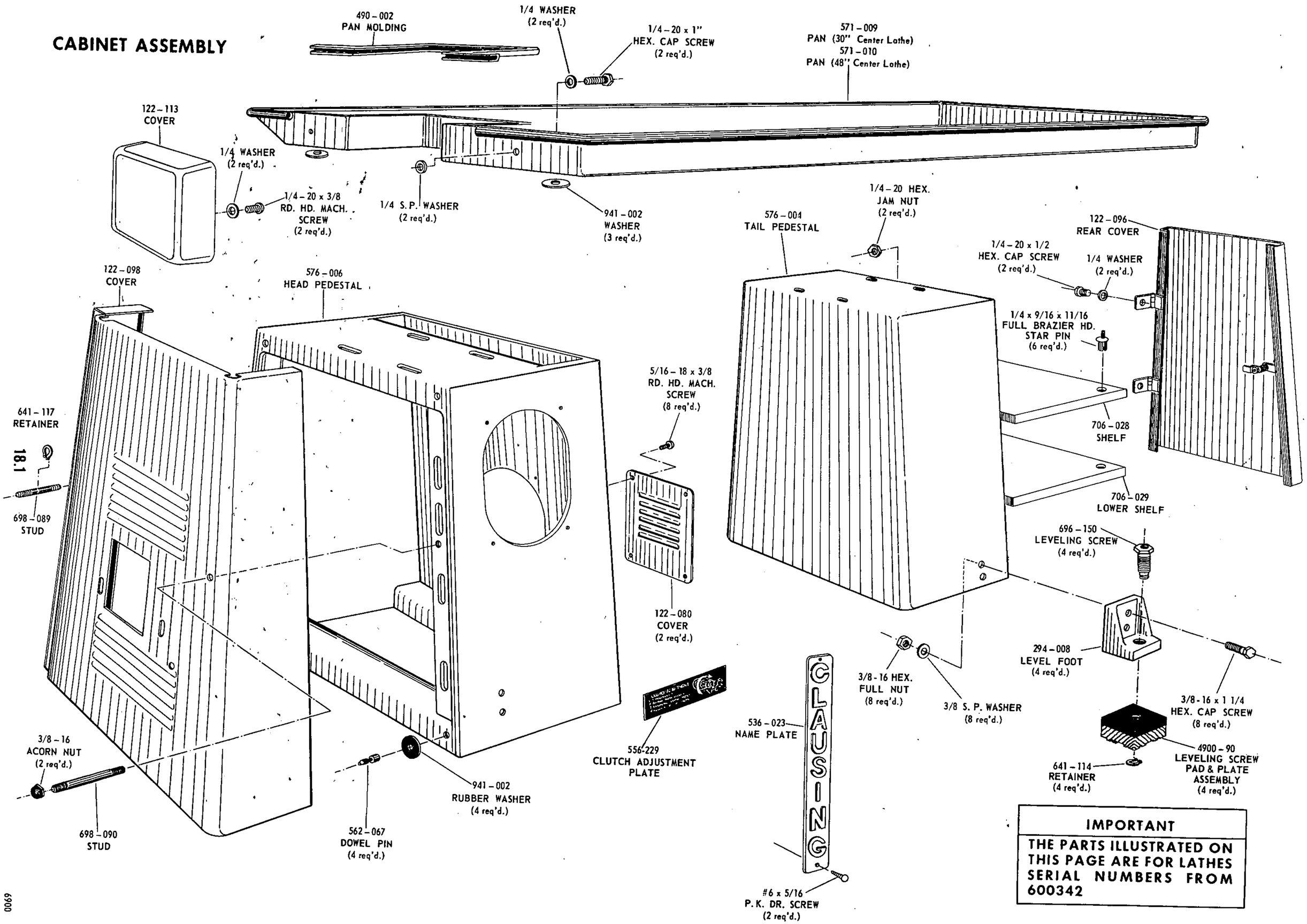

IMPORTANT

THE PARTS ILLUSTRATED ON THIS PAGE ARE FOR LATHES SERIAL NUMBERS FROM 600342

6900

This Manual Applies To Clausing 14" Lathes From Serial No. 600342 To 602127

CONTENTS

INSTALLATION

Dimension Drawing 2.1
Foundation 3.1
Cleaning 3.1
Moving and Lifting 3.1
Electrical Connections 4.1
Anchoring 4.1
Leveling 4.1

LUBRICATION

Lubrication Chart 5.1

OPERATION

Functional Diagram 6
Back Gear Controls 7
Spindle Speeds 7
Headstock 8
Quick-Change Gear Box 8
Carriage ..... 8 & 9
Tool Holders 10
Tailstock 11
Chucks and Face Plates 11

MAINTENANCE AND ADJUSTMENTS

Preventive Maintenance 12.1
Clutch Adjustment 12.1
Carriage Bearing Plates 12.1
Gibs 12.1
Countershaft Pulley Alignment 12.1
Shear Pin 13
Spindle Bearings 13
Variable Belt ..... 14.1 & 15.1
Timing Belt 15
Upper Variable Control Cylinder 16
Lower Variable Control Cylinder 16

PARTS INDEX & INSTRUCTIONS FOR ORDERING PARTS 17.3-34

ATTACHMENTS 35

TABLES I

GENERAL DIMENSIONS — 6900 SERIES CLAUSING LATHES

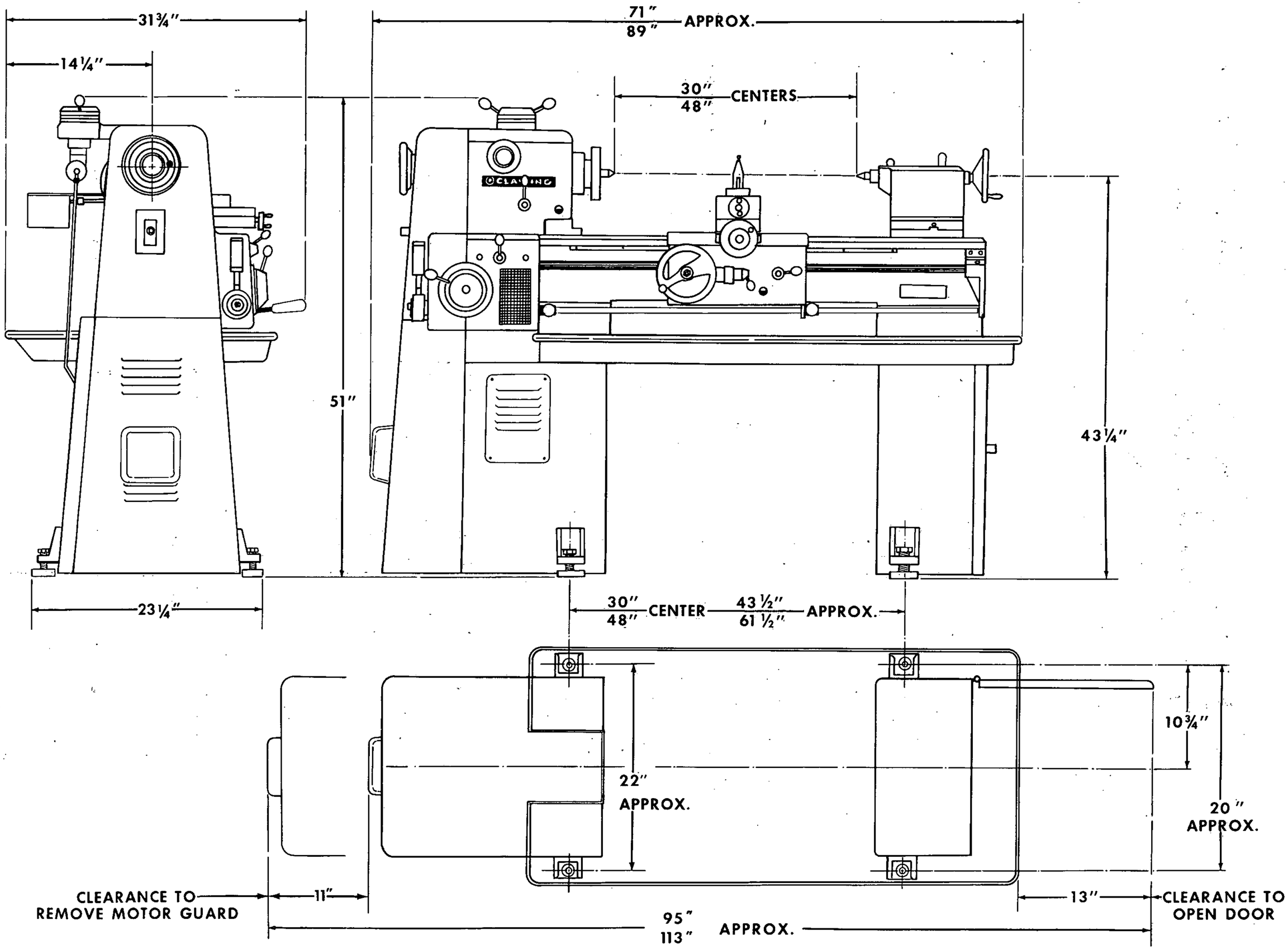

INSTRUCTIONS and PARTS

CLAUSING

DIVISION, ATLAS PRESS COMPANY
KALAMAZOO, MICHIGAN 49001

WIRING INSTRUCTIONS

for

6900 SERIES

CLAUSING LATHES

SEPTEMBER 1963 FILE NO. 710-042-1

REVERSING SWITCH FOR 3-PHASE (220 Volt) MOTORS

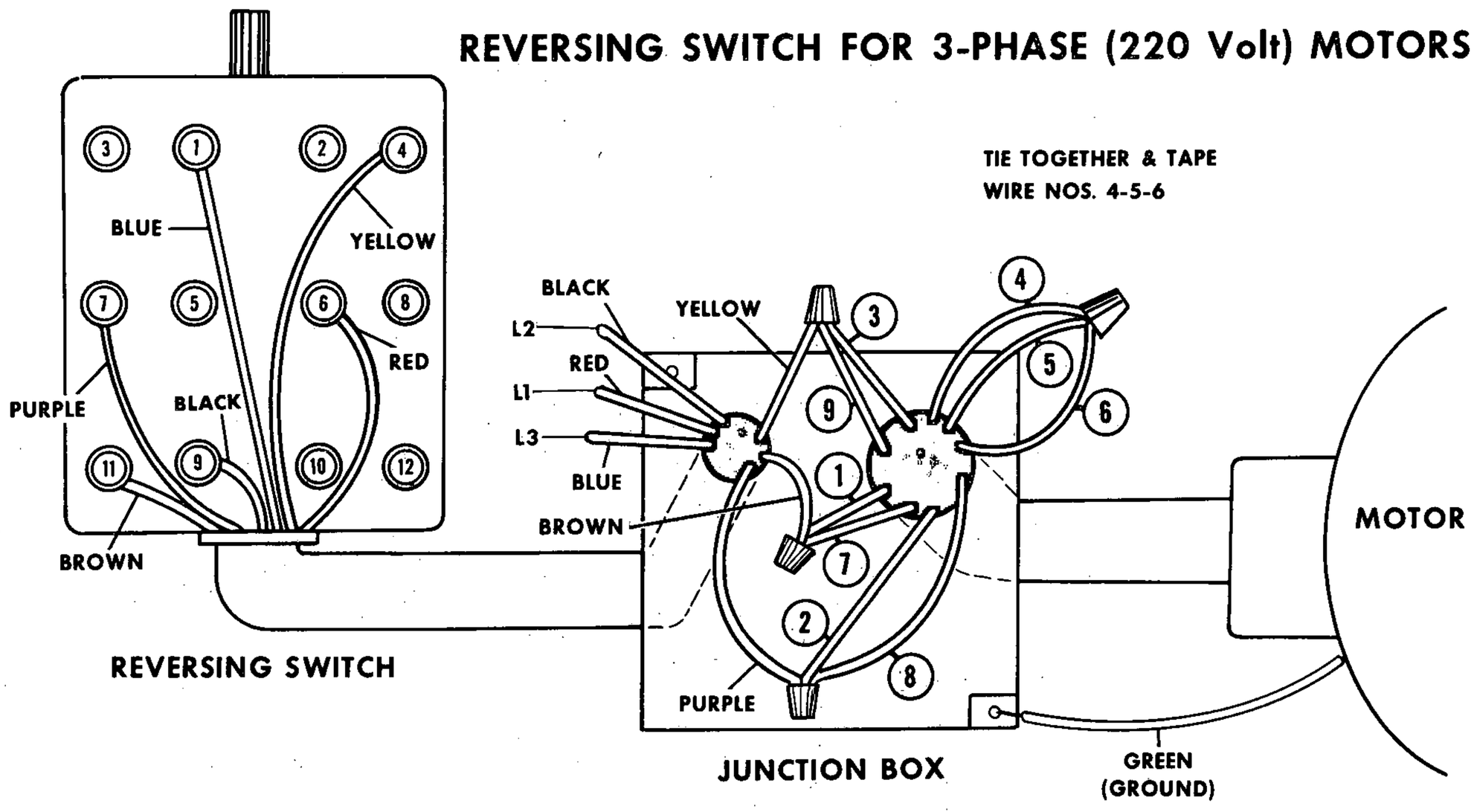

NOTE: TO REVERSE ROTATION OF MOTOR INTERCHANGE ANY TWO LINE LEADS L1, L2 OR L3.

REVERSING SWITCH FOR 3-PHASE (440 Volt) MOTORS

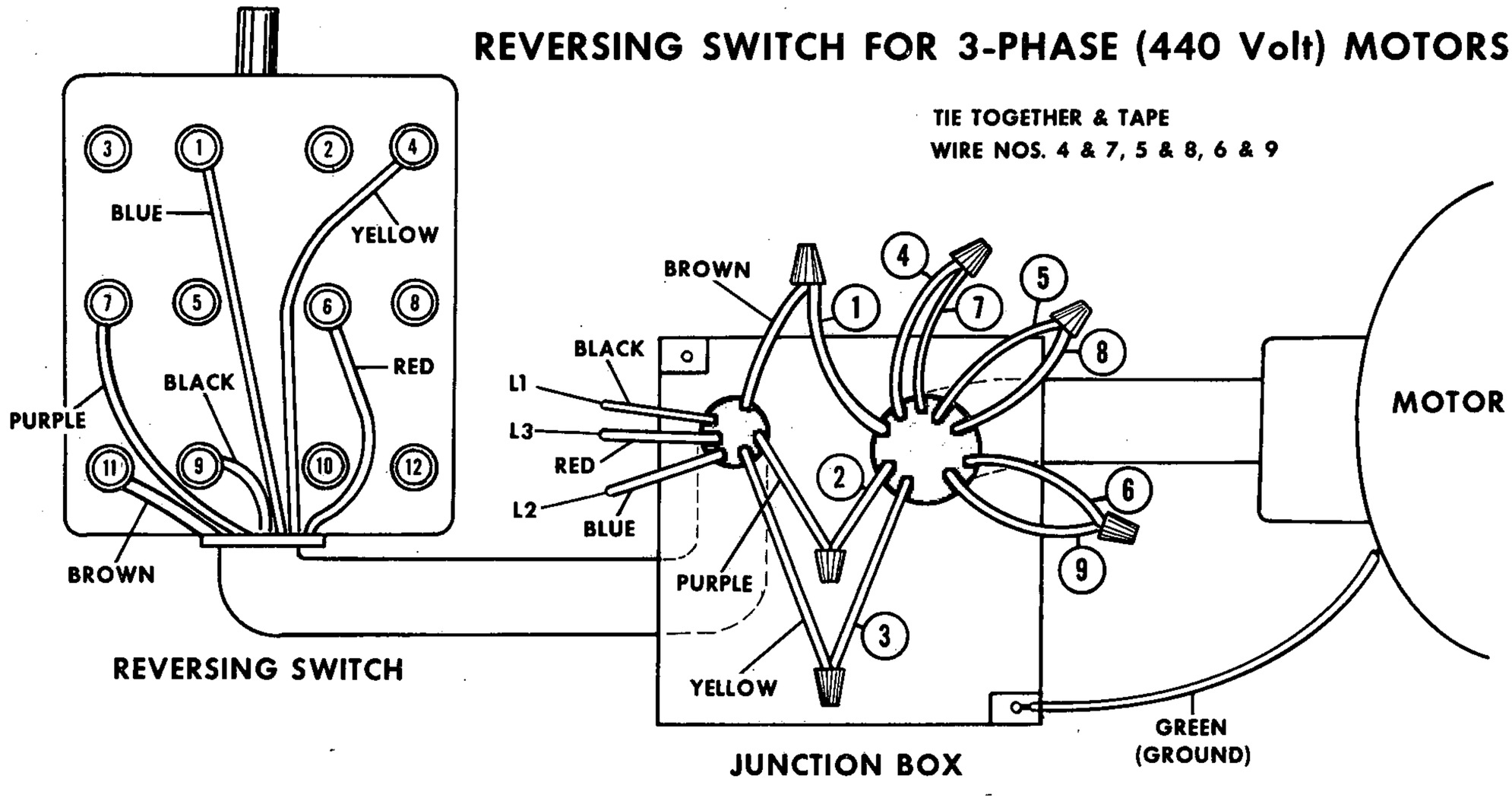

INSTRUCTIONS and PARTS

CLAUSING

DIVISION, ATLAS PRESS COMPANY
KALAMAZOO, MICHIGAN 49001

130-025-14
THREADING CHART

for

6900 SERIES CLAUSING 14" LATHES

JUNE 1967 FILE 130-025-14

A

C	SLIDE GEAR IN			SLIDE GEAR OUT		
	B	C	A	B	C	A ← B
1	4 .0367	8 .0183	16 .0092	32 .0046	64 .0022	128 .0011
2	4 1/2 .0326	9 .0163	18 .0081	36 .0041	72 .0020	144 .00094
3	5 .0293	10 .0147	20 .0073	40 .0036	80 .0018	160 .00092
4	5 1/2 .0267	11 .0134	22 .0066	44 .0033	88 .0017	176 .00083
5	5 3/4 .0255	11 1/2 .0127	23 .0063	46 .0031	92 .0016	184 .00079
6	7 .0209	14 .0105	28 .0052	56 .0026	112 .0013	224 .00065
7	6 3/4 .0218	13 1/2 .0109	27 .0054	54 .0027	108 .00136	216 .00068
8	6 1/2 .0226	13 .0113	26 .0056	52 .0028	104 .0014	208 .0007
9	6 .0244	12 .0122	24 .0061	48 .003	96 .0015	192 .00076

CROSS FEED 1/2 OF LONGITUDINAL

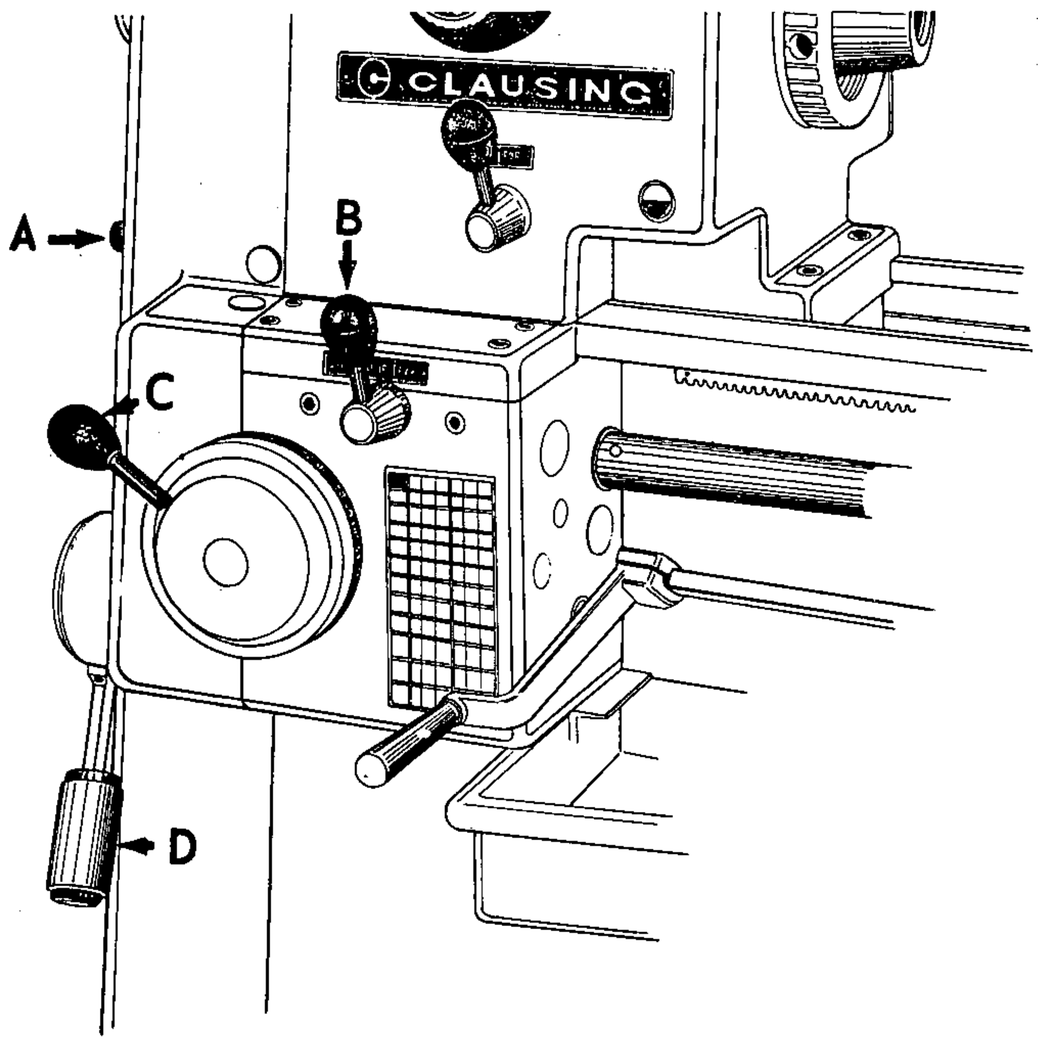

LEGEND

A. GEAR SHIFTER HANDLE changes ratio between spindle and lead screw. There are two positions IN and OUT. *Do not shift while spindle is turning.*

B. GEAR SHIFTER KNOB has three positions – B, C or A. To shift, place lead screw direction knob in neutral (center position) and turn sliding gear handle until knob can be engaged – *do not force.*

C. GEAR SHIFTER LEVER. To operate, disengage gear box engaging lever and turn dial to number indicated on chart.

D. GEAR BOX ENGAGING LEVER. To disengage, pull out handle of lever and move lever up as far as it will go. To engage, pull out handle of lever and move lever to down position.

IMPORTANT: When lever is in lowest position, stack gears are locked in mesh and thread-feed selector dial cannot be moved.

For complete operating instructions, refer to manual furnished with lathe.

INSTALLATION

FOUNDATION

Your Clausing lathe is a precision machine tool, and requires a solid foundation. The floor must be heavy enough to support the weight of the machine without noticeable deflection, and it must be level. If the floor does not meet these important requirements, a special foundation should be built.

CONCRETE FLOORS -- A reinforced concrete floor is the best foundation: it provides a rigid base, minimizes vibration from adjacent machines, and resists deflection.

WOOD FLOORS should be carefully checked for strength -- place a precision level on floor where lathe is to be located, and move a hand truck with average load past it. If bubble in level shows noticeable movement, the floor should be reinforced, or cut away and a concrete foundation installed.

CLEANING

Before moving carriage or tailstock along the ways, use a good grease solvent to remove the rust-proof coating applied to all polished and unpainted surfaces.

Do not use an air hose -- it could force dirt or grit picked up during transit into bearing surfaces.

Use a stiff bristle brush to clean lead screw.

When thoroughly cleaned, cover the unpainted surfaces with a light coating of "Way Lubricant" for proper lubrication.

Frequent cleaning and lubrication is essential to long service life -- *see page 5 for instructions.*

MOVING AND LIFTING

Leave lathe on skid -- simplifies moving to final location.

IMPORTANT: *DO NOT slide lathe along floor.*
DO NOT USE fork lift under chip pan.

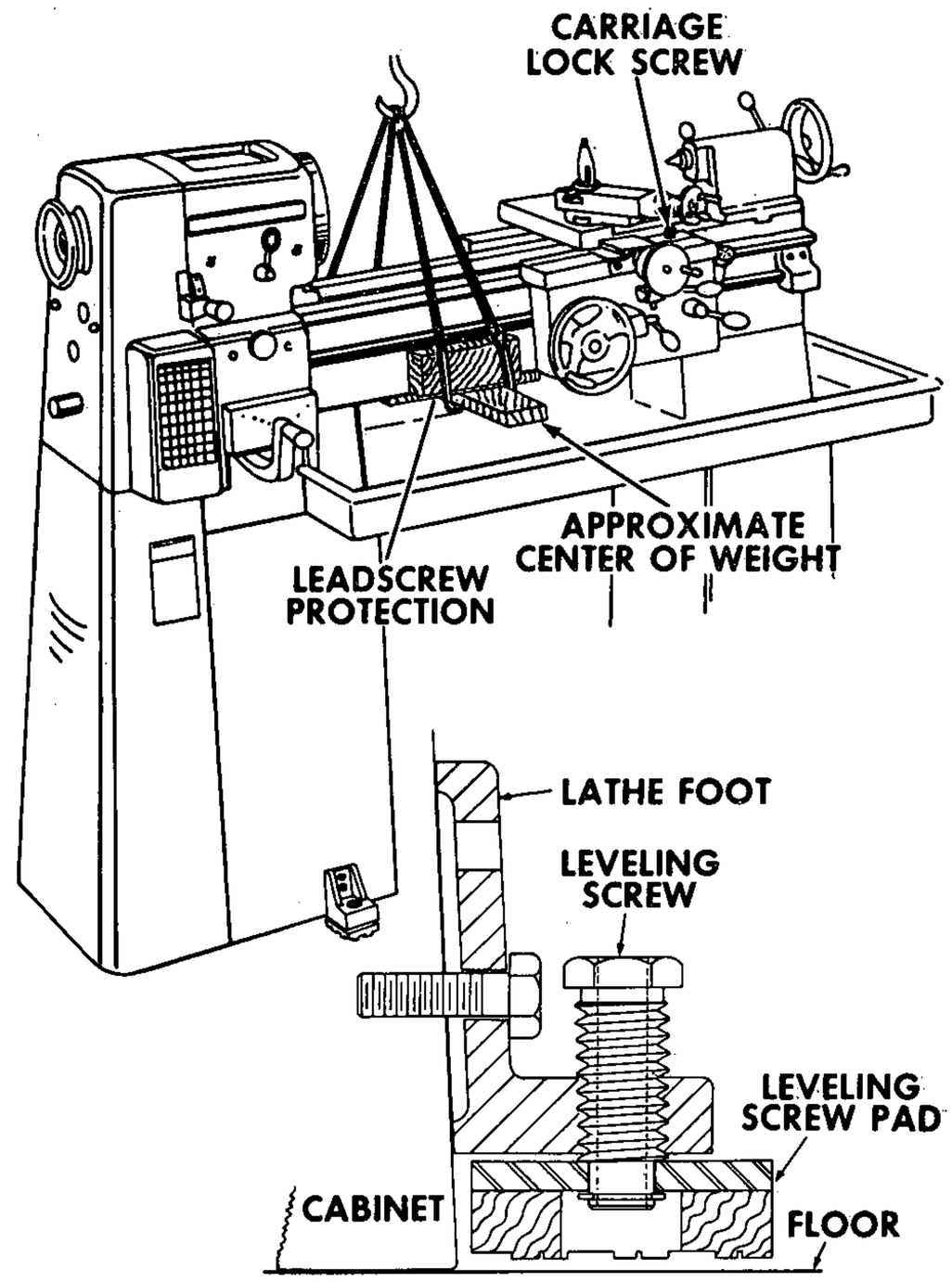

Figure 1

CAUTION: *DO NOT LOWER LEVELING SCREW PADS UNTIL LATHE IS READY TO BE LEVELED -- refer to figure 1.*

When using a sling -- clean bed ways, move tailstock to the right-hand end of the bed and lock it in place. To protect lead screw and bed, place a 3/4" thick hardwood board under approximate center of weight load, insert sling as shown in figure 1, and raise machine about one-inch off floor. Make any necessary adjustments for balance by moving carriage along bed. – *Before moving carriage, loosen lock screw* -- located on top right side of the carriage.

If a fork lift is used, place 3/4" thick hardwood board under the bed so that the clutch rod will not be bent when the lathe is raised -- *do not pick up by chip pan.*

Mounting pads do not require anchoring.

Leveling screws are equipped with non-slip mounting pads which eliminate the need for anchoring or bolting machine to floor. Floor must be clean and free of oil.

ELECTRICAL CONNECTIONS

The machine is wired at factory -- merely connect power supply to line leads in junction box on back of headstock cabinet. IMPORTANT: To reverse rotation of motor interchange any two line leads -- see WIRING INSTRUCTIONS.

Before connecting motor, make sure that voltage and other current requirements of the motor correspond with your power supply. If there is any question, verify your current and voltage by calling your power company.

ANCHORING LATHE TO FLOOR

CAUTION: DO NOT SLIDE LATHE ALONG FLOOR.

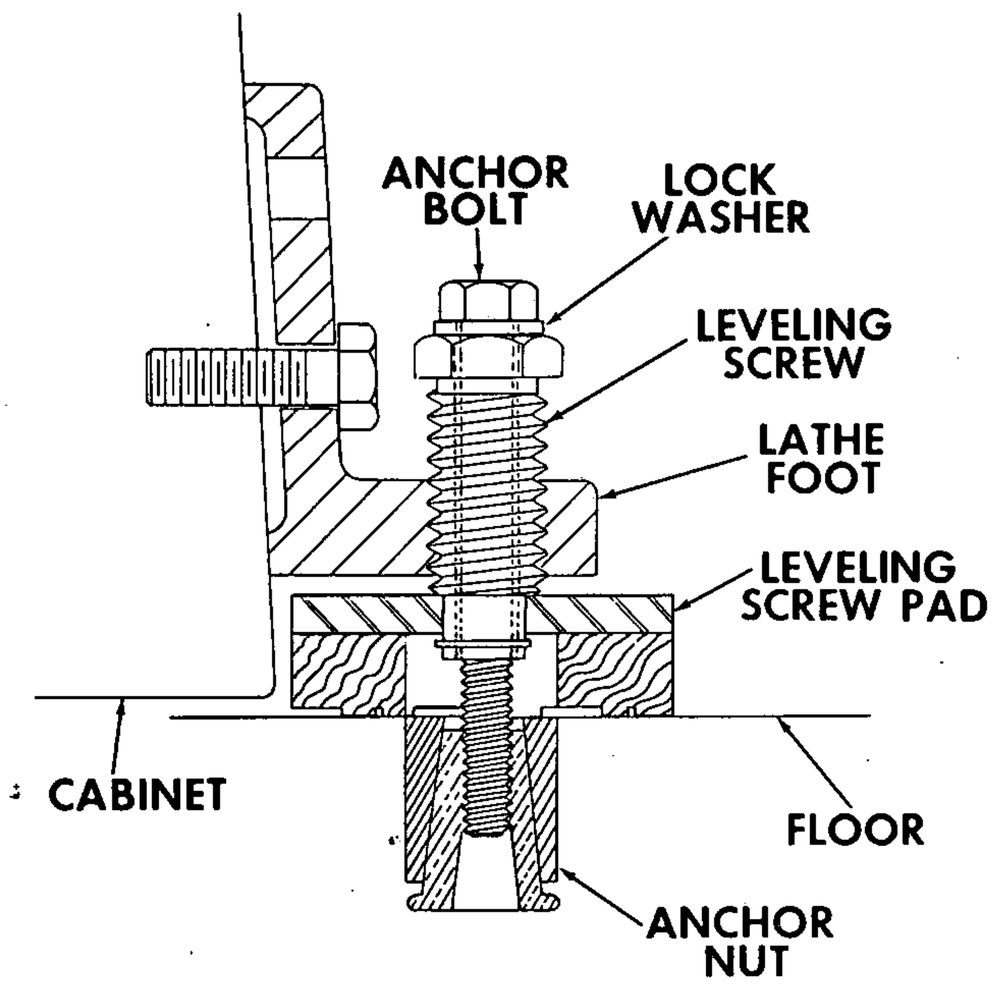

Figure 2

Use anchor bolts to secure lathe to concrete floor -- use lag screws to secure lathe to wood floor -- refer to figure 2.

With a hoist or lift, lower the lathe into position and mark the four leveling screw locations. DO NOT LOWER LEVELING SCREW PADS.

Lift machine out of the way, drill holes for anchor nuts and install anchor nuts -- for lag screws drill pilot holes.

Position and lower machine. Turn leveling screws until *no portion* of the lathe cabinet *touches the floor* -- shim under pads, if necessary.

Start anchor bolts or lag screws -- DO NOT tighten until lathe is level -- see Leveling Instructions.

LEVELING

The lathe should be kept perfectly level at all times. When carelessly mounted, the bed may become twisted. Even a slight amount of twist will move centers out of alignment and result in inaccurate work and excessive wear. Make it a habit to regularly check the level of the bed.

THIS IS IMPORTANT:

Use *one* precision level at least 6" long -- level should show a distinct bubble movement when a .003" shim is placed under one end.

Clean the bed ways thoroughly.

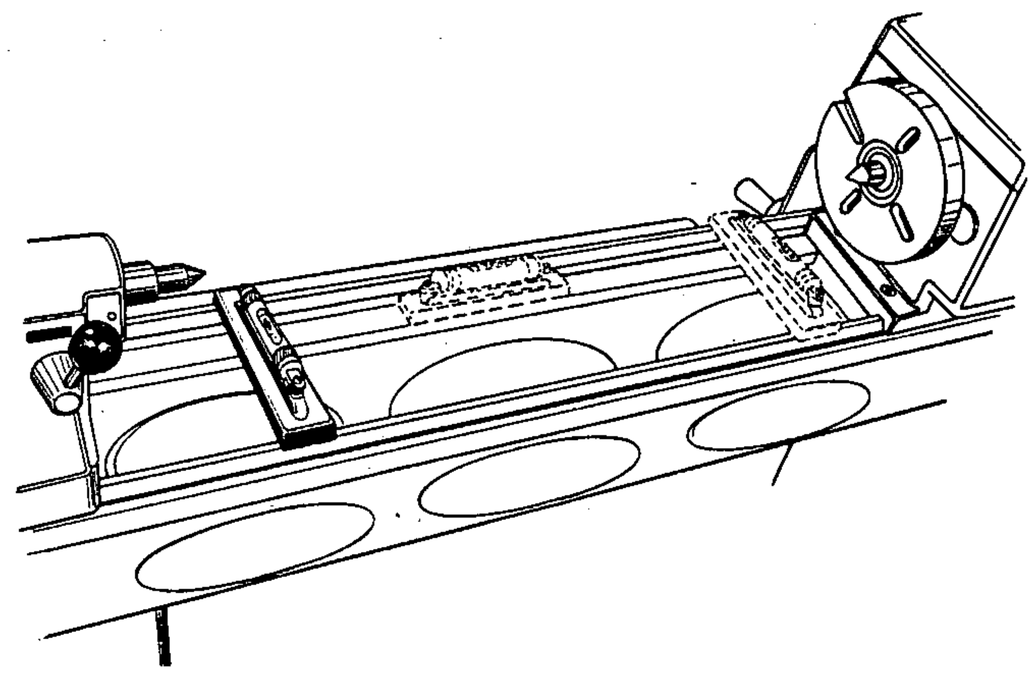

Figure 3

1. First level bed longitudinally, compensate for variations of bubble readings by turning the leveling screws on the cabinet base until bed is level -- refer to Figure 3 for level positions.

2. Next level both ends of the bed. The headstock and the tailstock -- must be checked with the level placed at right angles to the bed. Refer to Figure 3. Use a square to align the level. *Do not turn level end for end.*

Level reading at headstock and tailstock must be identical. Compensate for variations of bubble readings by turning the leveling screws until lathe is level.

NOTE: Avoid excessive adjustment of leveling screws by inserting shims between pads and floor.

3. Tighten the four anchoring bolts *not more than* finger-tight, or until the lock washers start to compress -- lag screws should be tightened, then backed off about one-quarter turn.

4. Recheck the level of the lathe -- unequal tightening of anchoring bolts may have pulled the bed out of level. Recheck leveling in 5 days.

Check level of bed at frequent intervals. Chatter -- turning taper -- boring taper -- facing convex or concave is the general result of an improperly leveled lathe.

LUBRICATION CHART - - - 6900 SERIES CLAUSING LATHES

CODE

D-DAILY oil with TEXACO WAY LUBRICANT "D" or equivalent.

WEEKLY

- **W1** - Oil with TEXACO WAY LUBRICANT "D" or equivalent.
- **W2** - Check oil level in window. Remove pipe plug and fill to mark with TEXACO REGAL PC-R&O oil or equivalent.
- **W3** - With motor running and variable turned to low speed, fill with TEXACO REGAL PC-R&O oil or equivalent.
- **W4** - With gear engaging lever in down position, check oil level in window. With lever in this position, fill to mark with TEXACO REGAL OIL "G" or equivalent.
- **W5** - Fill countershaft fitting and grease the two fingers with TEXACO MULTIFAK #2 grease or equivalent.
- **W6** - Check oil level in window. Remove filler plug and fill to mark with TEXACO REGAL OIL "G" or equivalent.

M-MONTHLY clean with Kerosene, then oil with TEXACO WAY LUBRICANT "D" or equivalent.

S-SEMIANNUALLY lubricate quadrant gear teeth with TEXACO CRATER No. 2X fluid or equivalent. Remove oil and dirt before applying.

* Remove plug.
** Remove plug and turn spindle until oiler shows.
*** Remove cover.

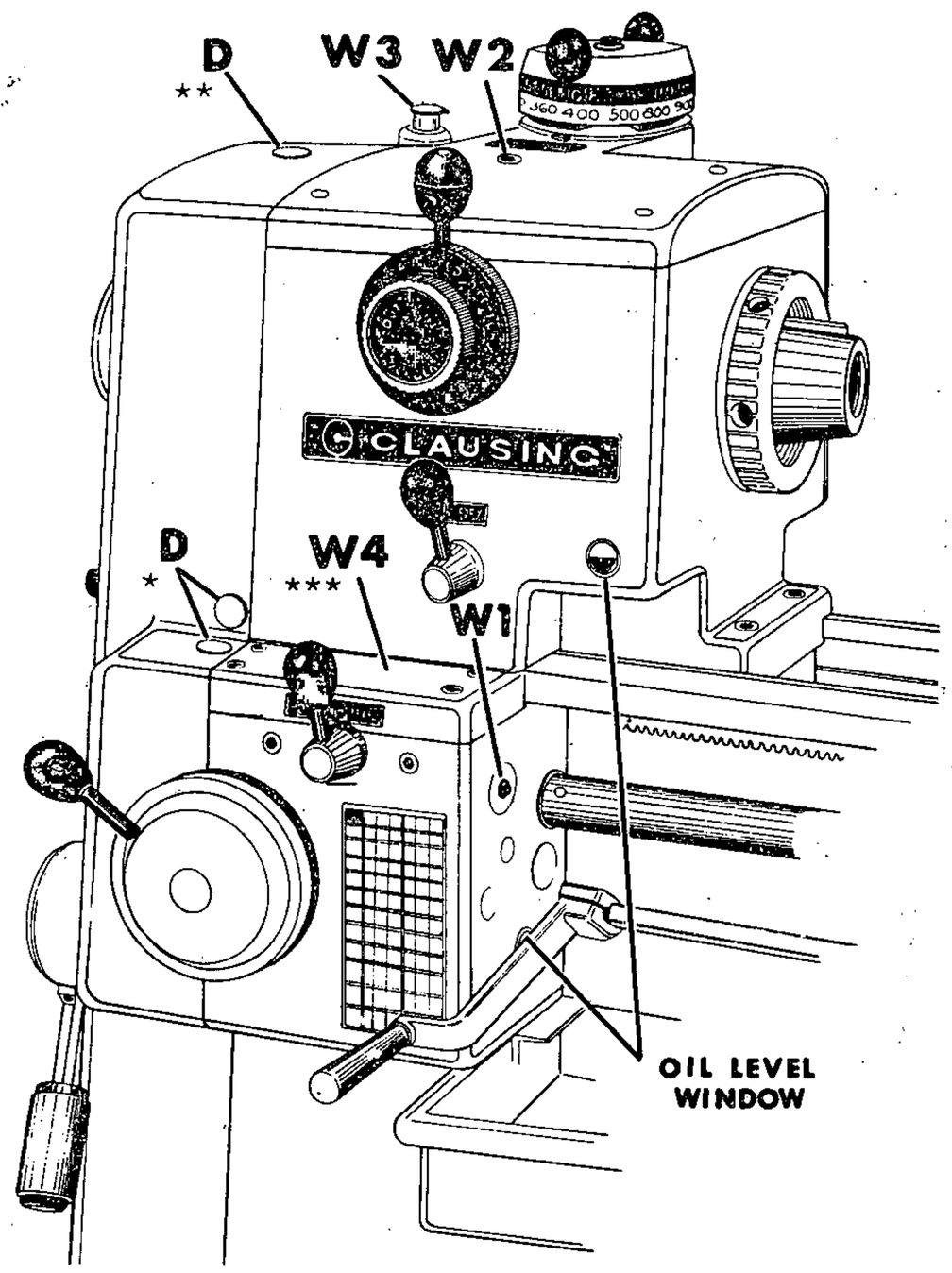

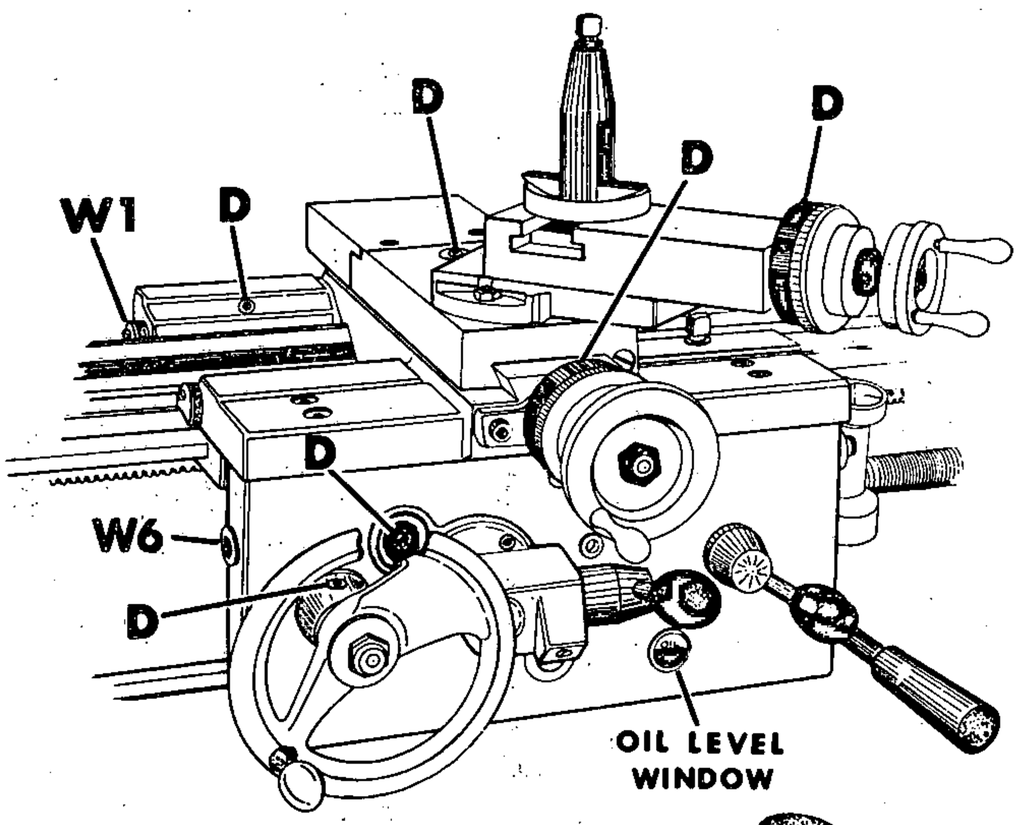

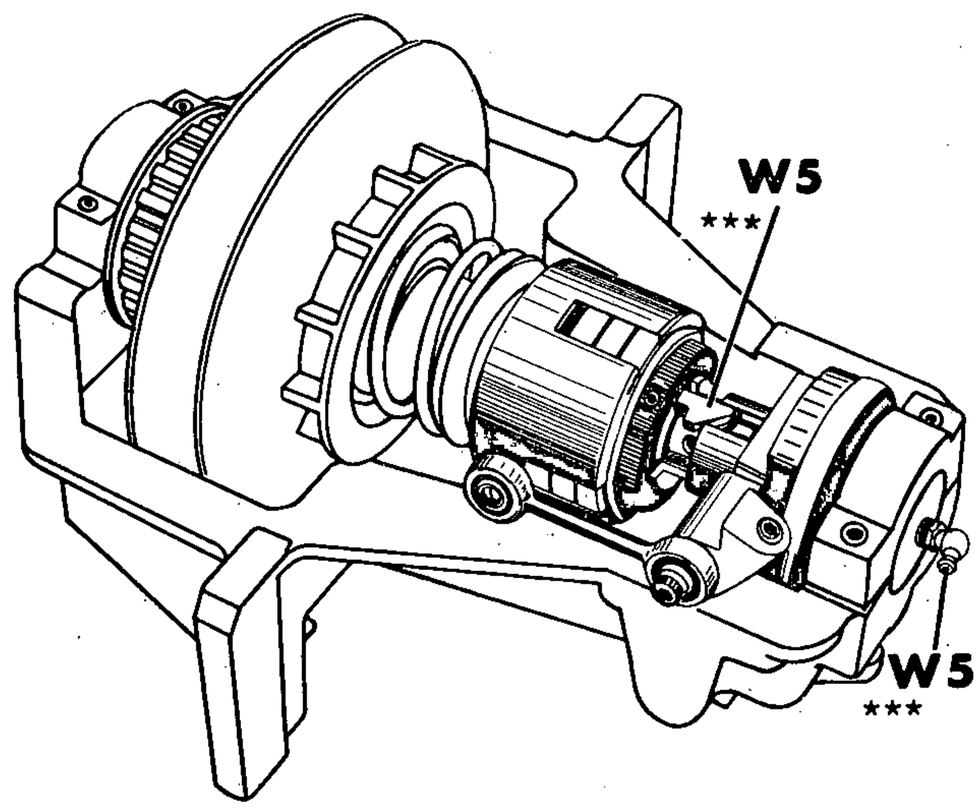

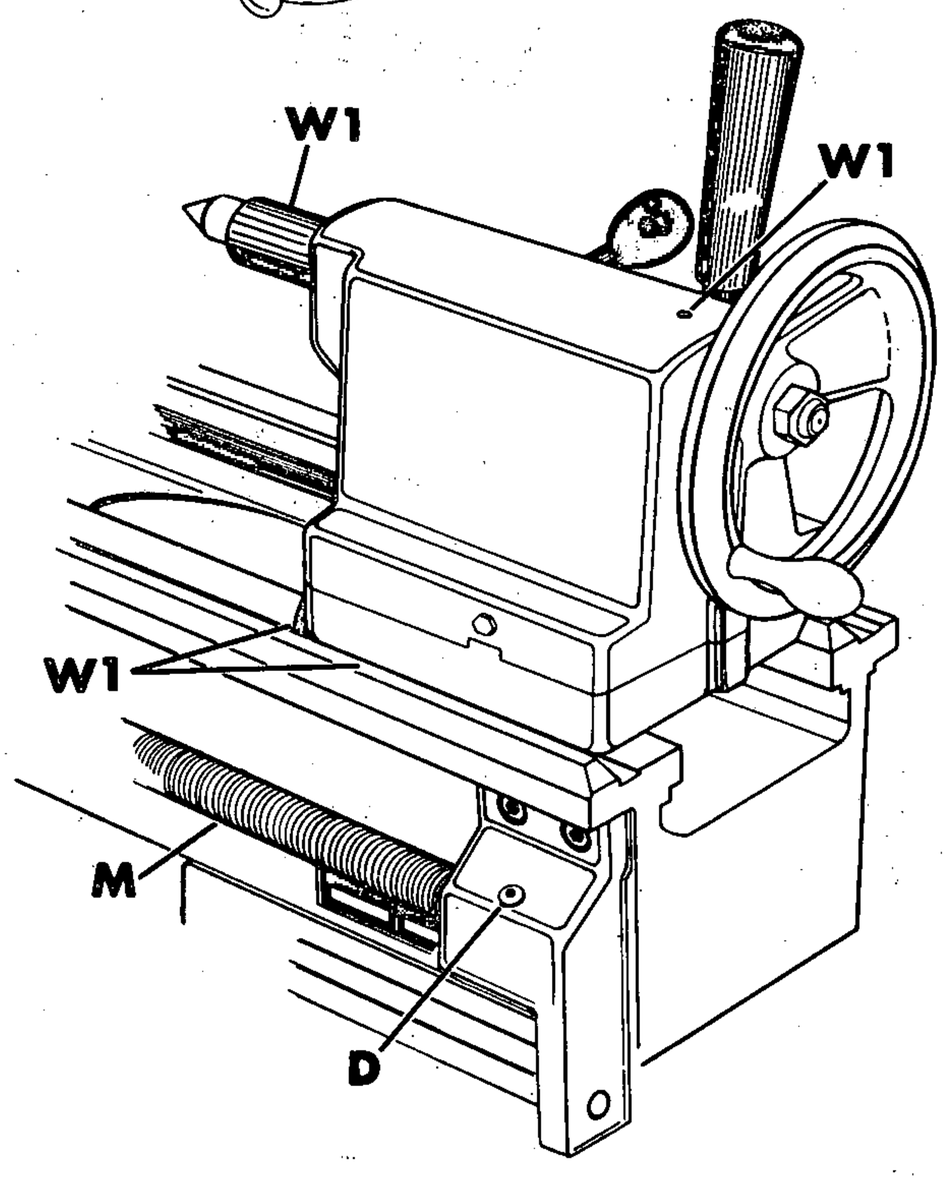

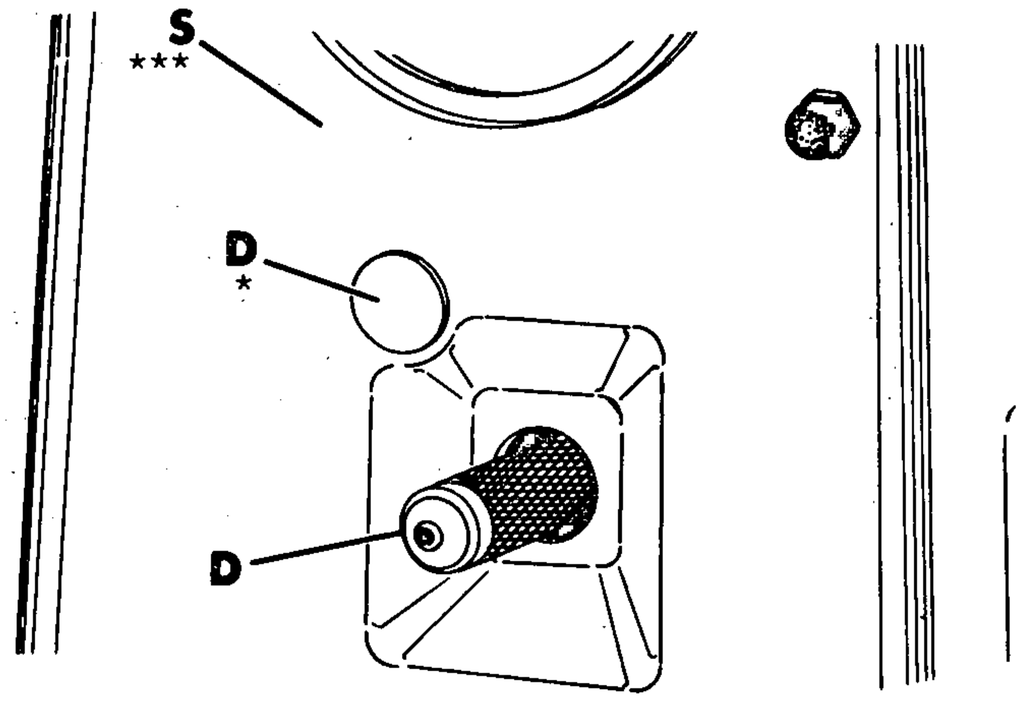

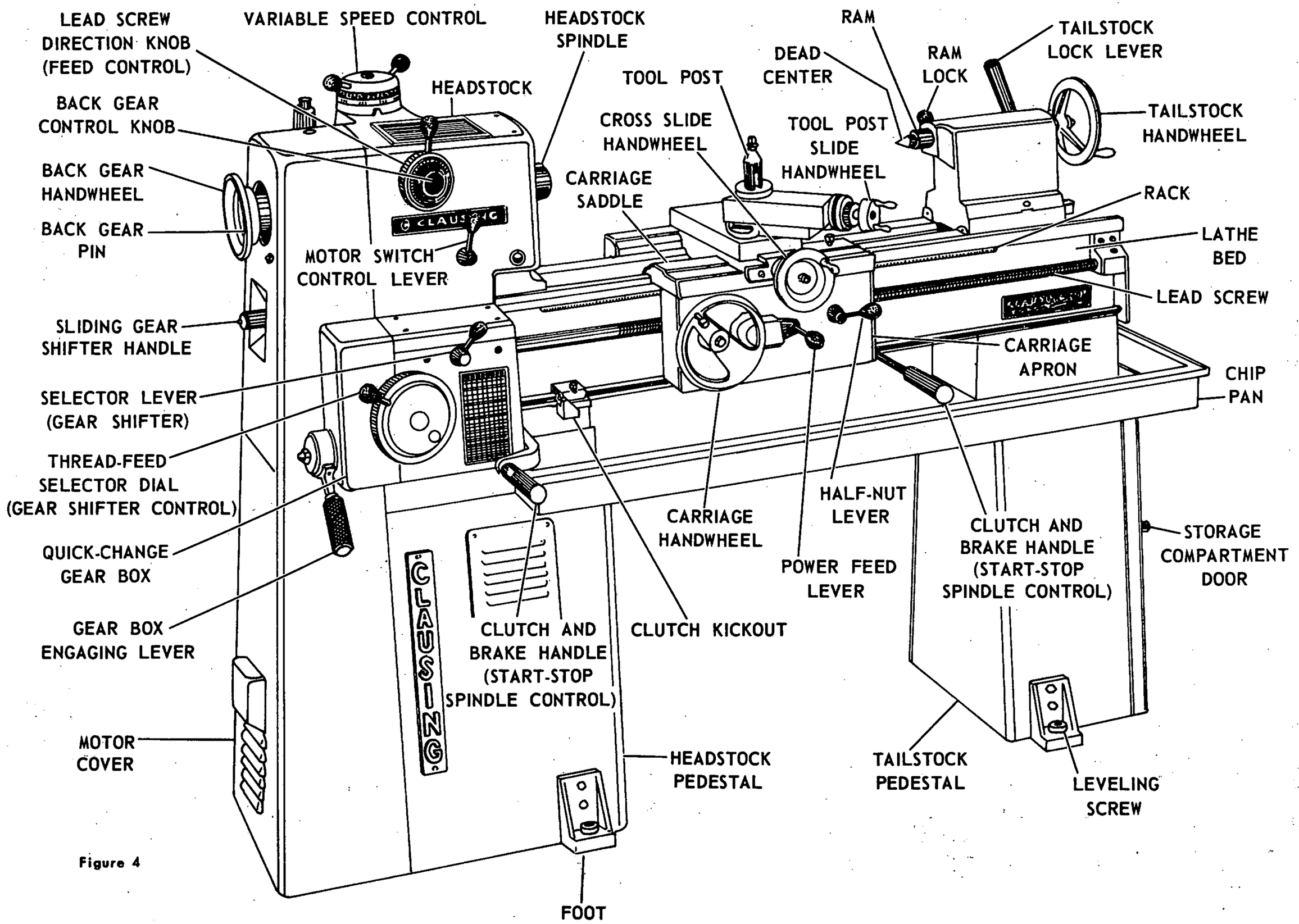

Figure 4

6900

CONTROLS AND OPERATIONS

Do not operate lathe until you are thoroughly familiar with all controls and their functions. The machine is shipped from factory with gears set for direct drive, and carriage locked to bed. *Read the instructions carefully.* Then, first operate the lathe in back gear -- get the "feel" of the controls -- set up different threads and feeds -- engage the power feeds -- get acquainted with the lathe before you start a job -- it will save time and produce better work.

HEADSTOCK

The totally enclosed headstock houses and supports the spindle, spindle bearings and driving gears. Gears, shafts, bearings and spindle bearings travel in a bath of oil.

BACK GEAR CONTROLS

BACK GEAR DRIVE provides the slow spindle speeds from 43 to 230 rpm required for heavy cuts and correct surface speeds for large diameter work.

IMPORTANT: The back gear knob should not be moved from one position to another unless motor is in "OFF" position. Spindle must come to a complete stop before changing drives.

To engage the back gear drive:

1. Stop lathe spindle.

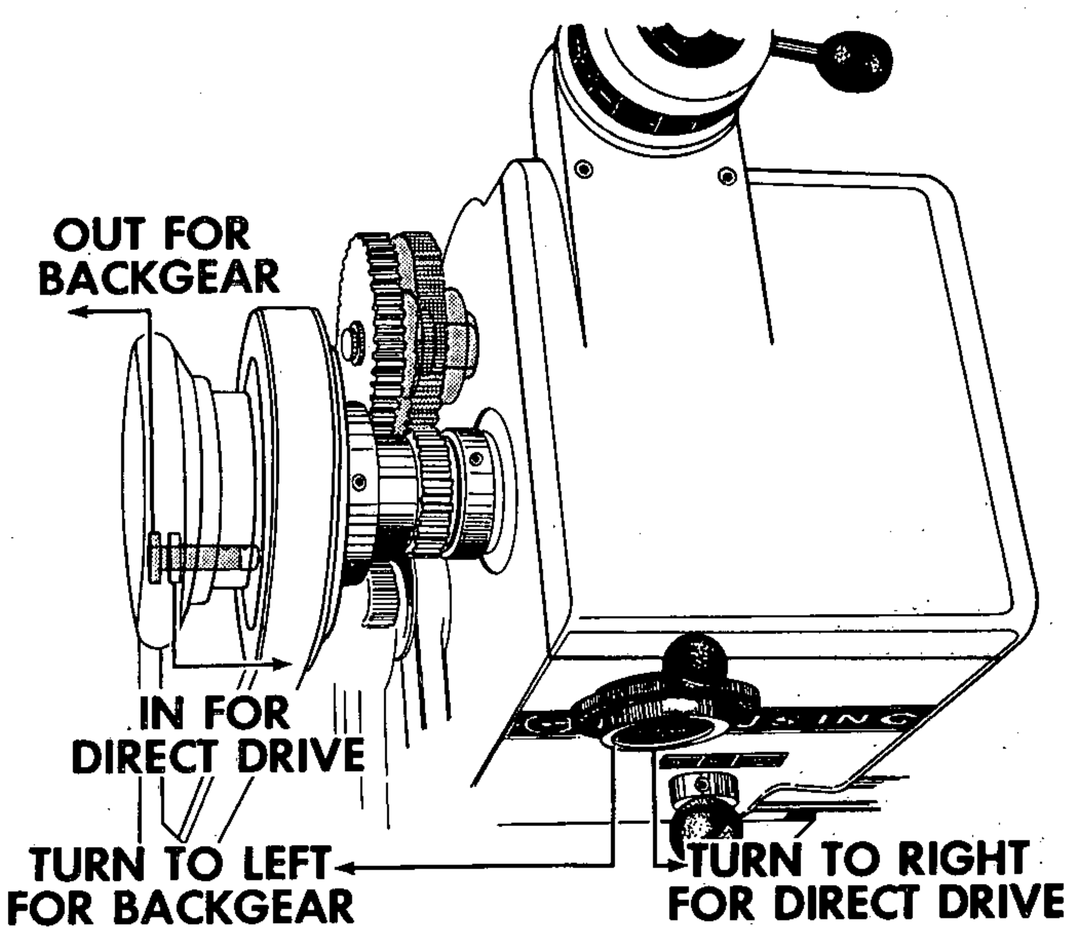

Figure 5

2. Turn back gear knob (figure 5) to the left -- *rotate spindle by hand if gears do not mesh.*

3. Disengage back gear pin from drive pulley by pulling pin away from headstock.

DIRECT DRIVE provides high spindle speeds from 300 to 1650 rpm.

To engage direct drive:

1. Stop spindle.

2. Turn back gear knob to the right.

3. Engage the back gear pin with drive pulley by pushing pin towards headstock -- rotate wheel if necessary.

SPINDLE SPEEDS

Speeds are changed hydraulically. Control dial, located on top of the headstock, actuates hydraulic system. Speeds -- between 43 and 230 rpm in back gear drive, and 300 to 1650 rpm in direct drive -- are obtained by turning the dial control.

Caution: DO NOT TURN CONTROL DIAL UNLESS MOTOR IS RUNNING -- it makes dial reading incorrect in terms of spindle rpm.

NOTE: Hydraulic system, however, is equipped with a by-pass valve that prevents damage if control dial is accidently turned while motor is not running.

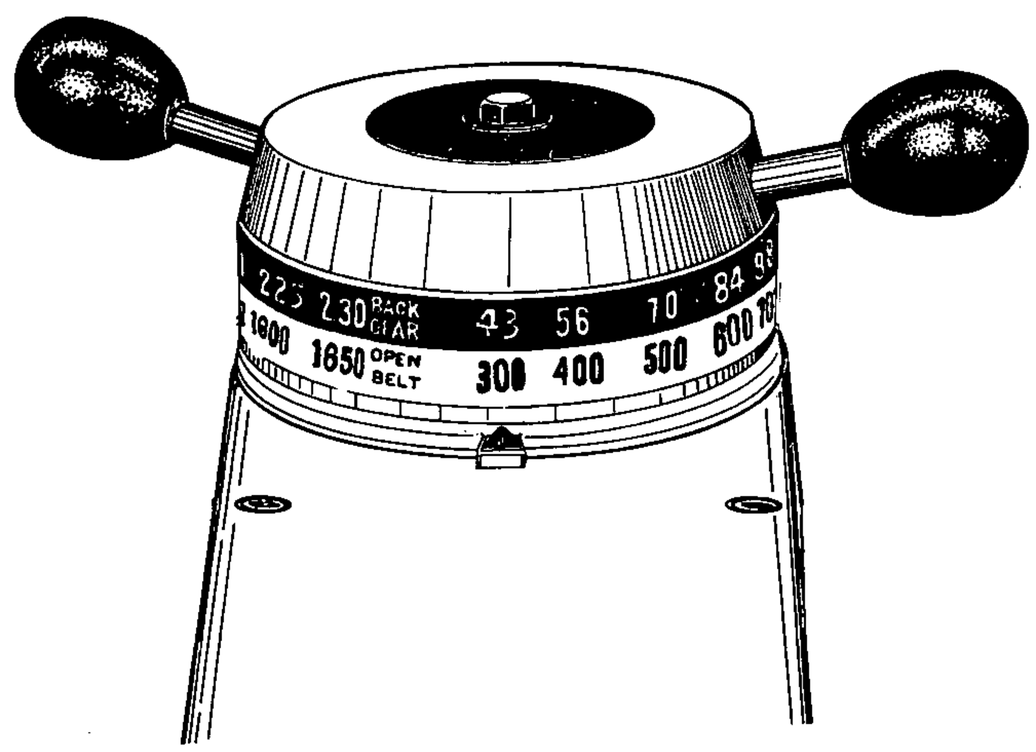

Figure 6

If dial reading is incorrect:

1. Start the motor -- turn variable speed control to 300 rpm (43 rpm if lathe is in back gear) -- refer to figure 6.

2. Hold at this speed, exerting slight pressure for 30 seconds.

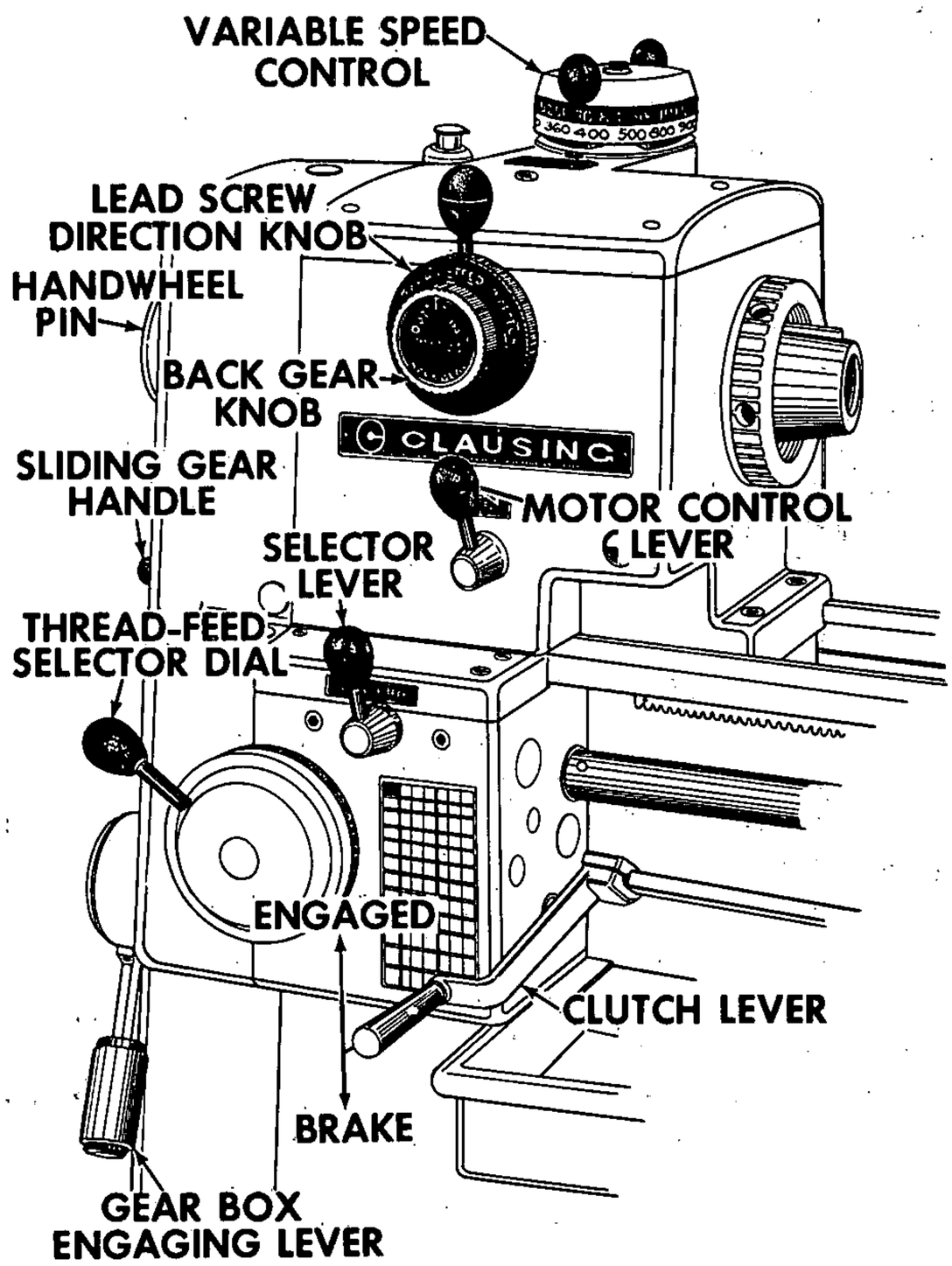

Figure 7

MOTOR CONTROL LEVER located on front of headstock controls rotation of lathe spindle. It has three positions -- REVERSE, OFF and FORWARD -- refer to figure 7.

To reverse rotation of motor and spindle:

1. Move lever to "OFF" position and allow spindle to stop.

2. Move lever to FORWARD or REVERSE position.

Caution: Always allow spindle to *stop* before reversing rotation.

LEAD SCREW DIRECTION KNOB has three positions: Vertical is neutral -- lead screw does not turn; Left, moves carriage toward tailstock; Right, moves carriage towards headstock.

CAUTION: Always stop spindle before shifting lead screw direction knob.

QUICK-CHANGE GEAR BOX

Quick-change mechanism determines the rate of rotation of lead screw in relation to the RPM of the spindle for threading, turning, and facing operations. Mechanism is totally enclosed, gears and shafts travel in bath of oil.

See figure 7 for the location of the controls described below.

GEAR BOX ENGAGING LEVER. To disengage, pull out handle of lever and move lever up as far as it will go. To engage, pull out handle of lever and move lever to down position.

IMPORTANT: When lever is in lowest position, stack gears are locked in mesh and thread-feed selector dial cannot be moved.

SLIDING GEAR HANDLE changes the ratio between the spindle and lead screw. There are two positions IN and OUT. *Do not shift while spindle is turning.*

THREAD-FEED SELECTOR DIAL. To operate, disengage gear box engaging lever and turn dial to number indicated on chart.

SELECTOR LEVER has three positions -- C, B, or A. To shift, place lead screw direction knob in neutral (center position) and turn sliding gear handle until knob can be engaged -- *do not force.*

CLUTCH AND BRAKE COUNTERSHAFT MODELS

Countershaft has friction clutch and brake for starting, stopping and jogging of spindle without stopping the motor. Moving clutch lever up engages spindle drive -- down disengages it and tightens the brake shoe and stops the spindle. Clutch kickout can be positioned to automatically disengage clutch -- refer to figure 8.

To set clutch kickout, determine stopping point then clamp to clutch control bar so clutch will be completely disengaged at stopping point.

CARRIAGE

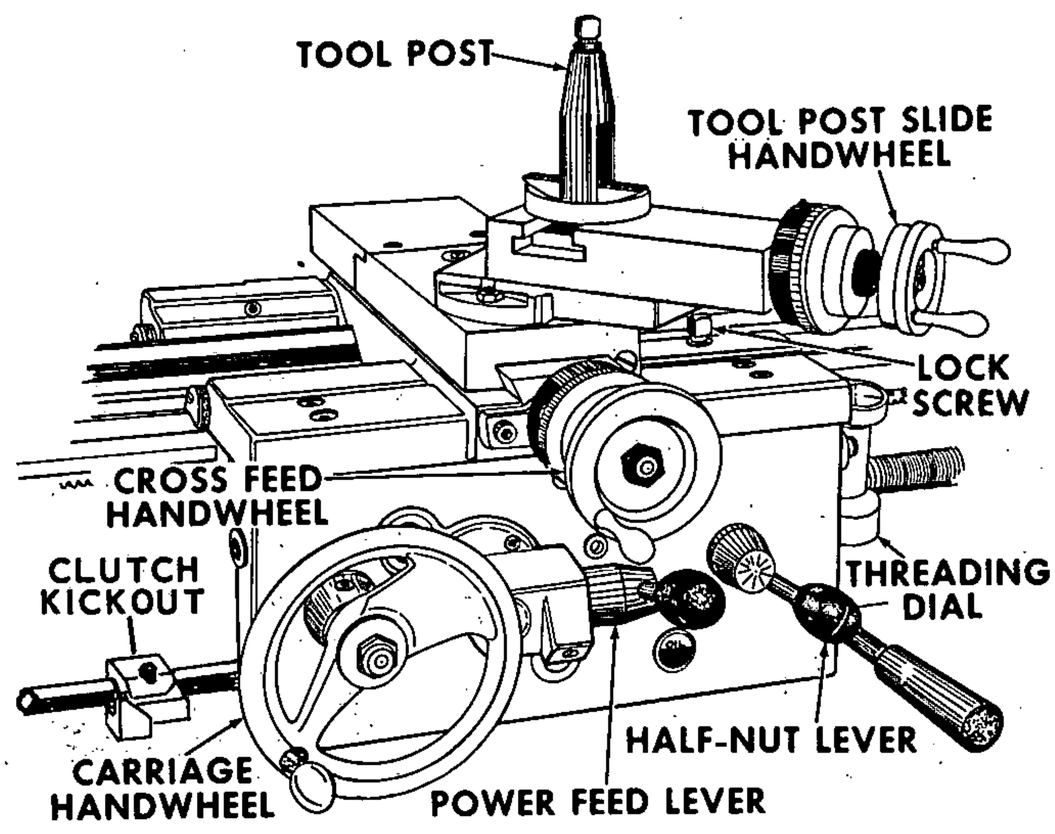

Figure 8

The function of the carriage is to rigidly support the cutting tool, and to move it along or across the bed -- refer to figure 8.

CARRIAGE LOCK SCREW locks carriage to bed for facing or cut-off operations. *Caution:* Be sure to release lock before moving carriage.

CARRIAGE HANDWHEEL moves carriage along the bed manually.

CROSS FEED SLIDE AND COMPOUND REST HANDWHEELS move the cross slide and compound rest in and out.

POWER FEED LEVER controls the operation of both power longitudinal feed and power cross feed. Lever has three positions: center disengages (neutral for hand feeding), to the left and down engages power cross feeds, to the right and up engages power longitudinal feeds.

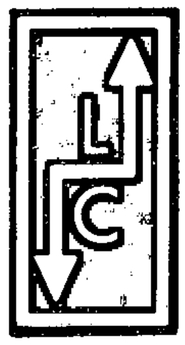

Caution: The power feed lever and the half-nut lever are interlocked. Half-nuts must be disengaged (half-nut lever in down position) before power feeds can be engaged.

NOTE: Cross feed is ½ of the rate of longitudinal feed.

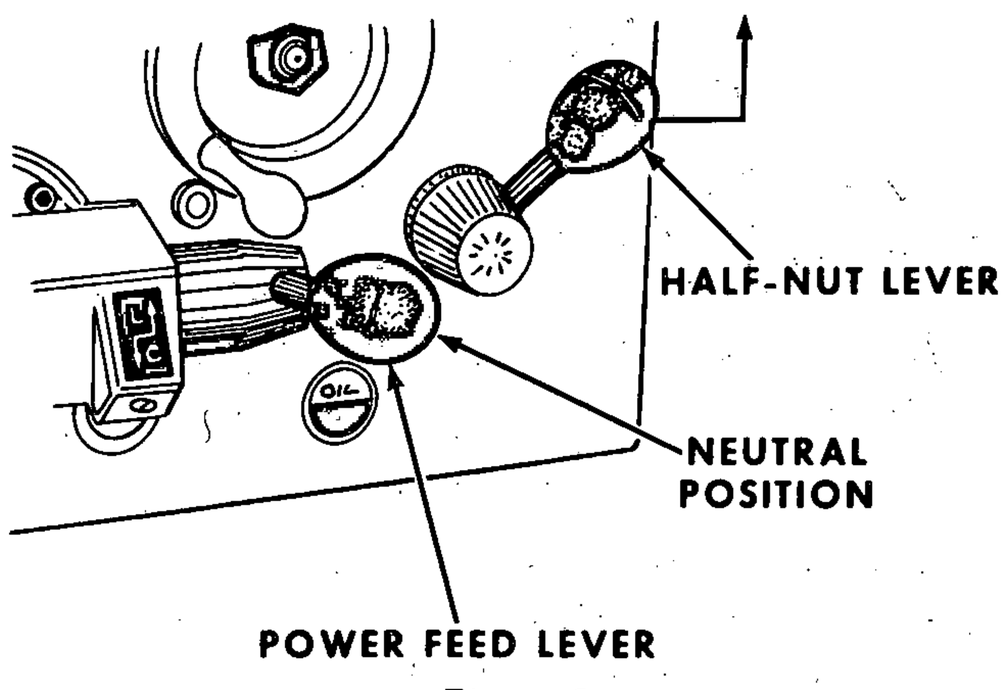

Figure 9

HALF-NUT LEVER engages half-nuts with lead screw for threading -- refer to figure 9.

To engage half-nuts:

1. Move power feed lever to center (disengaged or neutral position).

2. Move half-nut lever to up position.

NOTE: Safety lock prevents engaging feeds and half-nuts at same time -- *do not force levers.*

Important: Never use half-nuts for power feeds. Using half-nuts for threading only will maintain the accuracy of the lead screw.

THREADING DIAL

The threading dial performs the important function of indicating the proper time to engage the half-nut lever so that tool will enter the same groove of the thread on each successive cut.

To maintain the accuracy of the worm gear, loosen clamp screw and swing threading dial away from lead screw when not threading.

When cutting *even-numbered thread* (such as 12, 14, 16, 32, etc., per inch), engage the half-nut lever for the first cut when the stationary mark on the outside of the threading dial is in line with *any* of the marks on rotating portion of the dial. Any dial marking may be used for successive cuts.

When cutting *odd-numbered thread* (such as 7, 9, 11, 23, 27, etc., per inch), engage the half-nut lever for the first cut and all successive cuts when the stationary mark on the threading dial is in line with *any* of the numbered marks on the dial.

When cutting *half-numbered threads* (such as 4½, 5½, 6½, 11½, etc., per inch), engage the half-nut lever at the *same* number on the threading dial for *each* cut.

The threading dial cannot be used for metric threads. For these, the half-nut is closed on the lead screw, and remains engaged until the thread is completed. After each cut and tool withdrawal, the tool is brought back to starting point by reversing the spindle.

SEQUENCE OF ENGAGING CONTROLS FOR THREADING OR FEEDS

1. Disengage power feed or half-nut lever.

2. Set quick-change mechanism for thread or feed desired:

   A. Pull out handle of GEAR BOX ENGAGING LEVER and move lever up as far as it will go.

   B. Turn THREAD-FEED SELECTOR DIAL to the number indicated on chart.

   C. Position SLIDING GEAR, as indicated on chart.

   D. Position SELECTOR LEVER to C, B or A, as indicated on chart.

   E. Pull out handle of GEAR BOX ENGAGING LEVER and move lever down to engaged position.

3. Shift LEAD SCREW DIRECTION KNOB for direction desired.

4. Select drive - - either direct or back gear - - according to spindle speed required.

5. Start motor.

6. Move variable speed control dial to spindle speed desired.

7. Engage carriage controls -- longitudinal power feed lever for feeds, half-nuts for threading.

8. With tool in position, make a "trial run" without touching work to make sure the setup is right.

NOTE: When threading, be sure threading dial is engaged with lead screw. Set clutch kickout to avoid interfering with threading cut.

FOR CLUTCH and BRAKE MODELS -- be sure clutch is disengaged (handle in down position) before starting motor.

TOOL POST

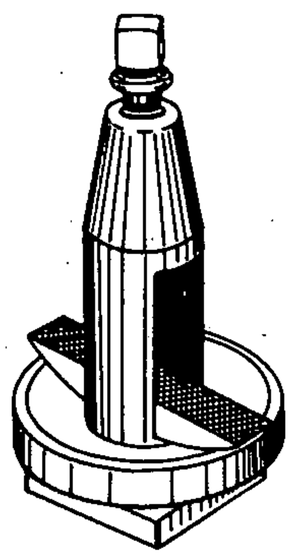

Figure 10

The tool post holds the tool rigidly in position for cutting operations -- refer to figure 10.

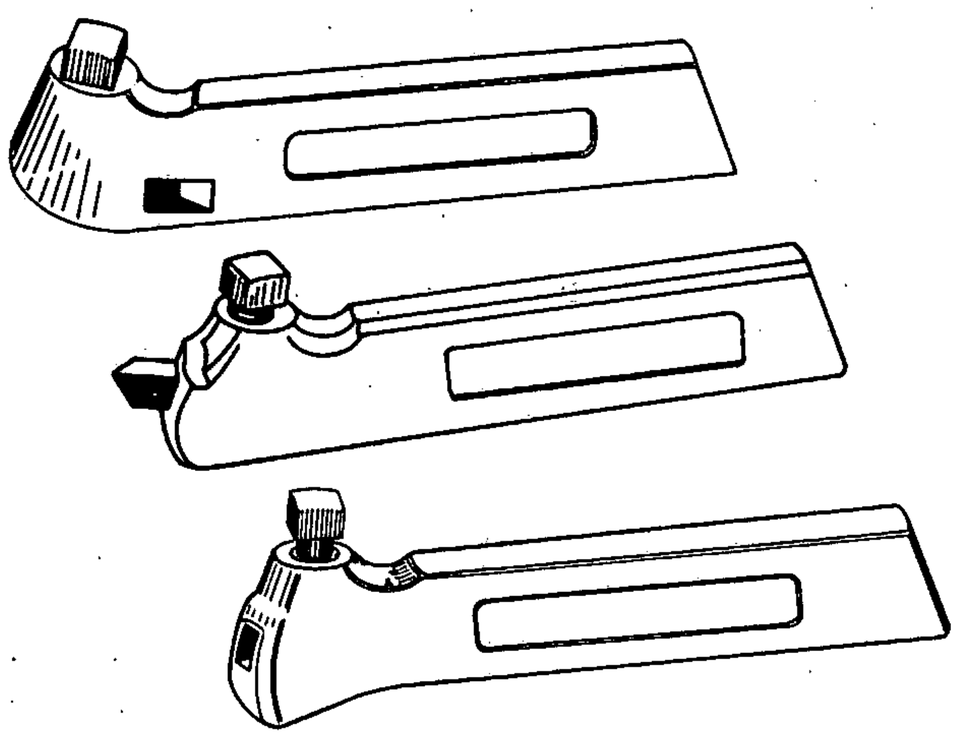

Figure 11

Tool bit holders permit the use of small, inexpensive and replaceable tool bits -- refer to figure 11.

In order to avoid undesirable overhang, tool bits should be clamped so the cutting end of the tool bit is as close to the holder as the work will permit, and, the tool holder should be as far back in the tool post as possible.

The cutting edge of the tool should be placed on lathe center line.

PROPER POSITION OF TOOL POST SLIDE

For maximum tool support, the front edge of the tool post slide should be positioned flush with the front end of the upper swivel.

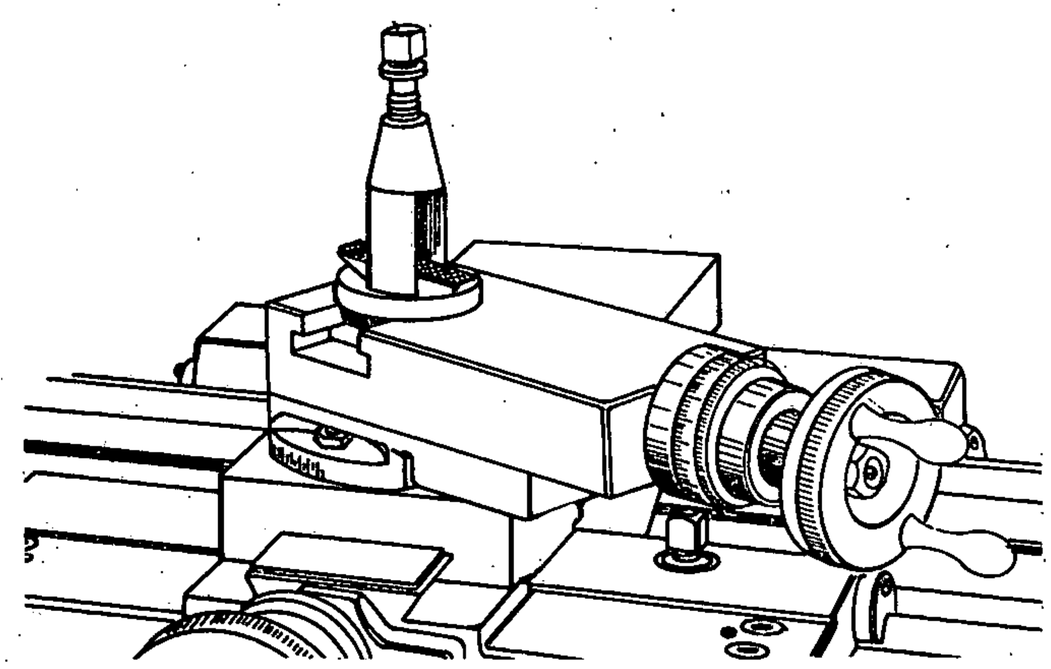

Figure 12

RIGHT -- Tool post slide is flush with front end of the upper swivel, therefore provides maximum tool support -- refer to figure 12.

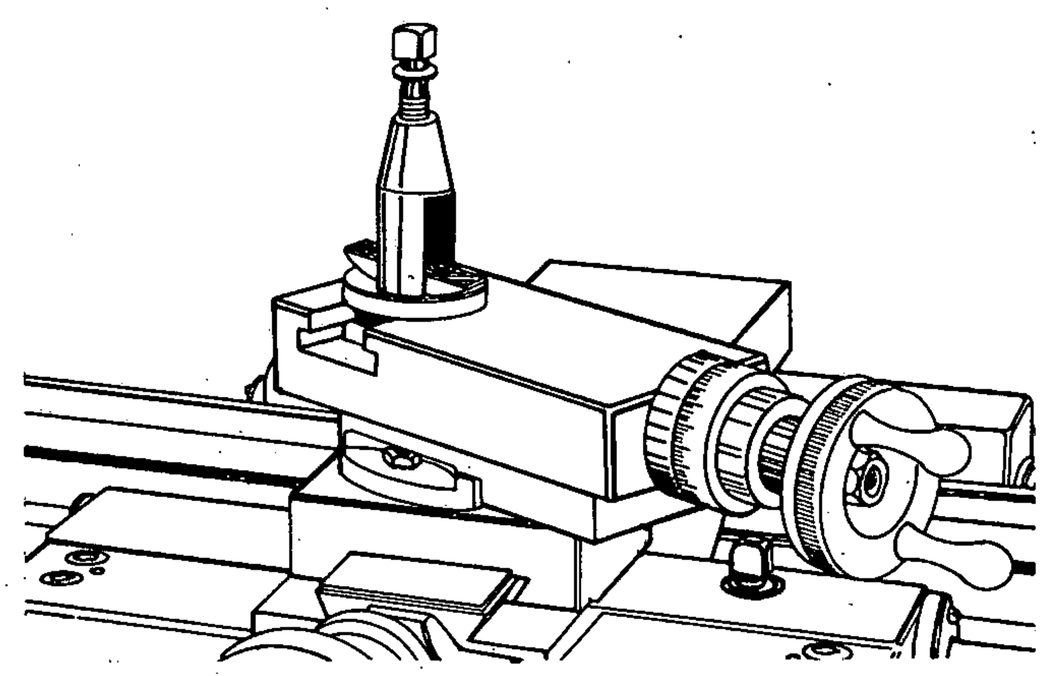

Figure 13

WRONG -- Unnecessary overhang of tool post slide will result in tool chatter, and could cause the tool post slide to break -- refer to figure 13.

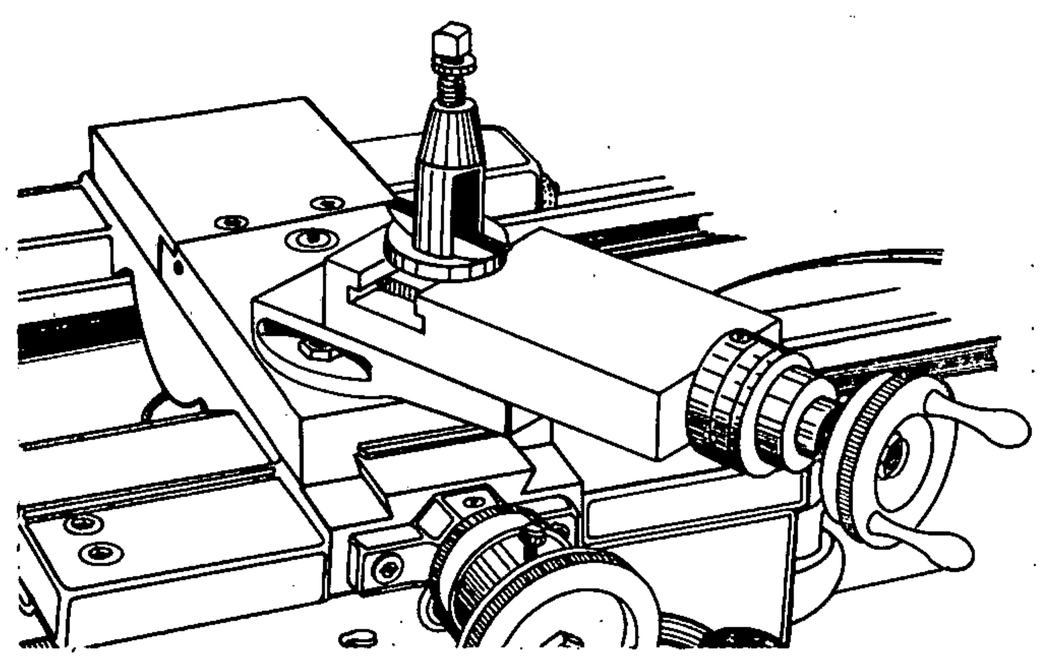

Figure 14

WRONG -- Tool post slide is too far back -- tool overhang is excessive -- refer to figure 14.

TAILSTOCK

The tailstock supports long work, and holds tools for drilling and reaming operations.

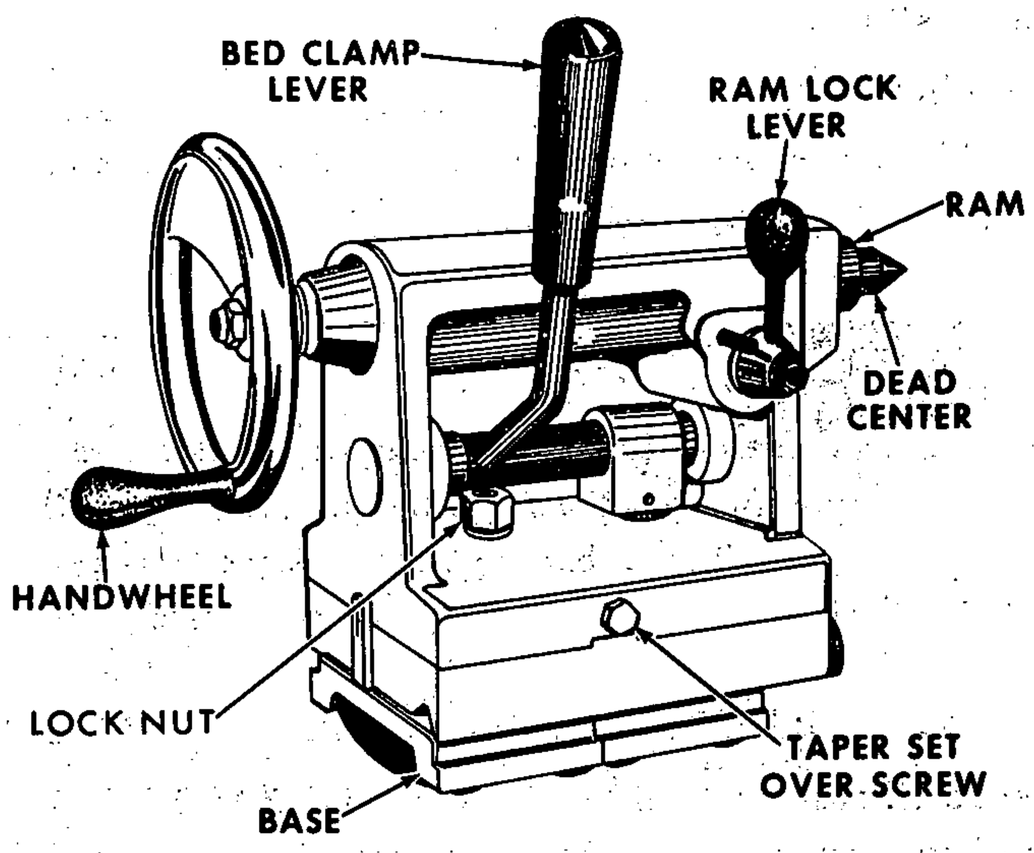

Figure 15

Base is fitted to bed ways to accurately align tailstock and headstock spindles, refer to figure 15. Tailstock slides along the ways, and may be anchored in any position by locking the bed clamp lever or tightening the auxiliary lock nut.

Ram is actuated by handwheel -- graduations simplify drilling and boring. Lever locks ram in position. Before inserting center or tools in ram, clean both tapers thoroughly with a clean, dry cloth.

Tailstock may be set over for taper turning by loosening the bed clamp and adjusting the screws on front and rear of tailstock base.

MOUNTING CHUCKS AND FACE PLATES

Before mounting on lathe, carefully clean the following:

1. Taper on spindle nose.
2. Threads in spindle nose collar.
3. Taper in chuck or face plate.
4. Threads on chuck or face plate.

Caution: Chips and dirt may score mating surface causing an inaccurate fit.

To mount face plate or chuck:

1. Rotate spindle until key is up.
2. Lock spindle by:
   (A) Placing back gear knob in engaged position.
   (B) Pushing handwheel pin in.
3. Lock chuck or face plate on spindle nose:
   (A) Slide chuck or face plate on spindle nose.
   (B) Tighten collar by turning spanner wrench counterclockwise.
4. Unlock spindle.

NEVER TURN ON POWER WHEN SPINDLE IS LOCKED.

TO REMOVE CHUCK OR FACE PLATE

1. Lock spindle.
   (A) Place back gear knob in engaged position.
   (B) Push handwheel pin in.
2. Place heavy board across bed to protect ways if chuck is dropped.
3. Loosen collar by turning spanner wrench clockwise.
4. *Carefully* remove chuck or face plate.
5. Unlock spindle.

NEVER TURN ON POWER WHEN SPINDLE IS LOCKED.

CHUCK MAINTENANCE AND CARE

PROTECT -- when not in use, place chuck in a covered box -- don't leave it exposed to dirt or chips -- the accuracy of any chuck can be destroyed if dirt or chips collect in the scroll, threads, jaws, or slots.

CLEAN and OIL FREQUENTLY -- Most wear is due to dirt and lack of proper lubrication. Oil chuck jaws and scroll at regular intervals with a light film of clean No. 10 S.A.E. machine oil. *Caution:* Do not apply too much oil -- it collects dust and chips.

IMPORTANT

KEEP YOUR LATHE CLEAN -- Oil and dirt form an abrasive compound which will damage bearing surfaces. Using way lubricant wipe the bed and all machined surfaces with a clean rag at frequent intervals. Use a brush to clean spindle, gear teeth, lead screw threads, etc.

MAINTENANCE AND ADJUSTMENTS

PREVENTIVE MAINTENANCE

The lathe should be kept clean and properly lubricated at all times.

Don't use your lathe for a work bench. Don't leave tools on bed ways.

Always shut off power before leaving lathe.

Recheck level of the bed frequently.

Lock tailstock to bed ways before turning between centers.

Before threading, clean chips and dirt from lead screw, and oil lightly.

Securely lock tool in position before taking a cut.

CLUTCH ADJUSTMENT

Adjusting clutch -- if the countershaft clutch slips when spindle drive is engaged, adjust as follows:

1. Remove front cover.

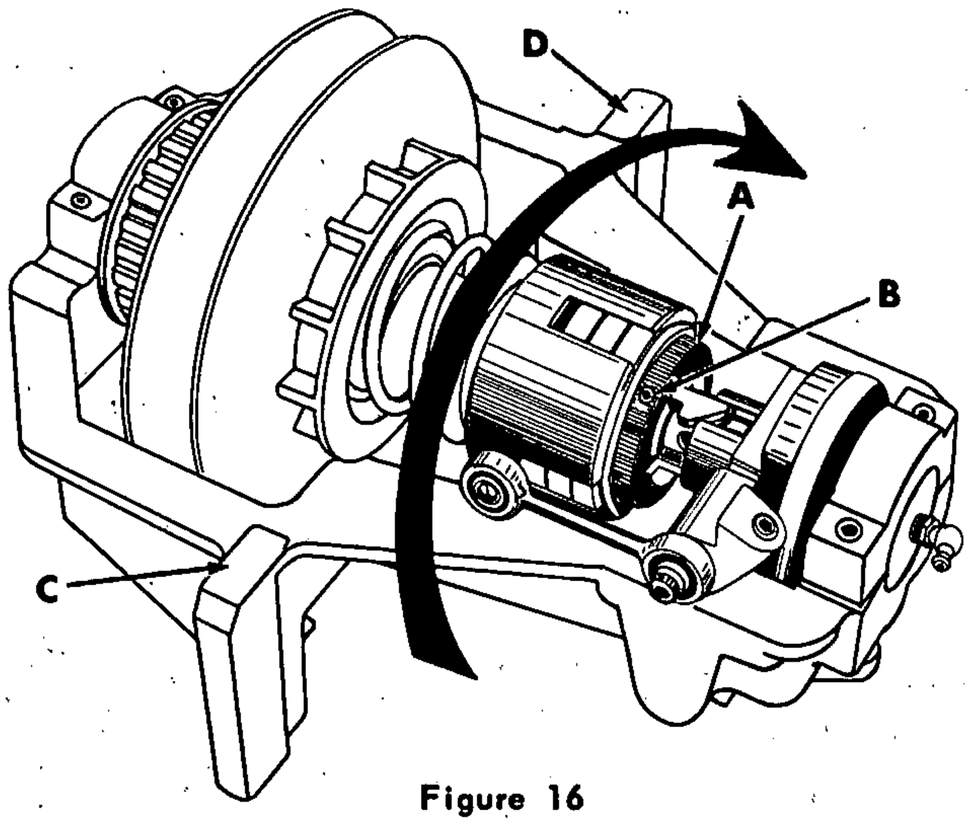

Figure 16

2. Loosen the lock screw (B, fig. 16) in the adjusting ring (A).
3. Turn the adjusting ring in a clockwise direction approximately 1/8 turn. *DO NOT OVER-TIGHTEN*- just enough to prevent slipping.

   NOTE: If adjusting ring is turned too tightly -- clutch will not engage when clutch lever is moved up.
4. Retighten lock screw.

ADJUSTING CARRIAGE BEARING PLATES

Bearing plates on the carriage, which bear on the underside of both the front and rear bed ways, anchor the carriage firmly to the bed in a vertical direction. Bearing plates have shims of varying thickness for adjustment of possible wear.

CROSS SLIDE OR COMPOUND SLIDE GIB ADJUSTMENT

Gibs are properly adjusted, when tool post slide and cross slide move with a slight drag.

To adjust the tapered gibs:

1. Shift power feed lever to neutral position.
2. Loosen the rear adjusting screw several turns.

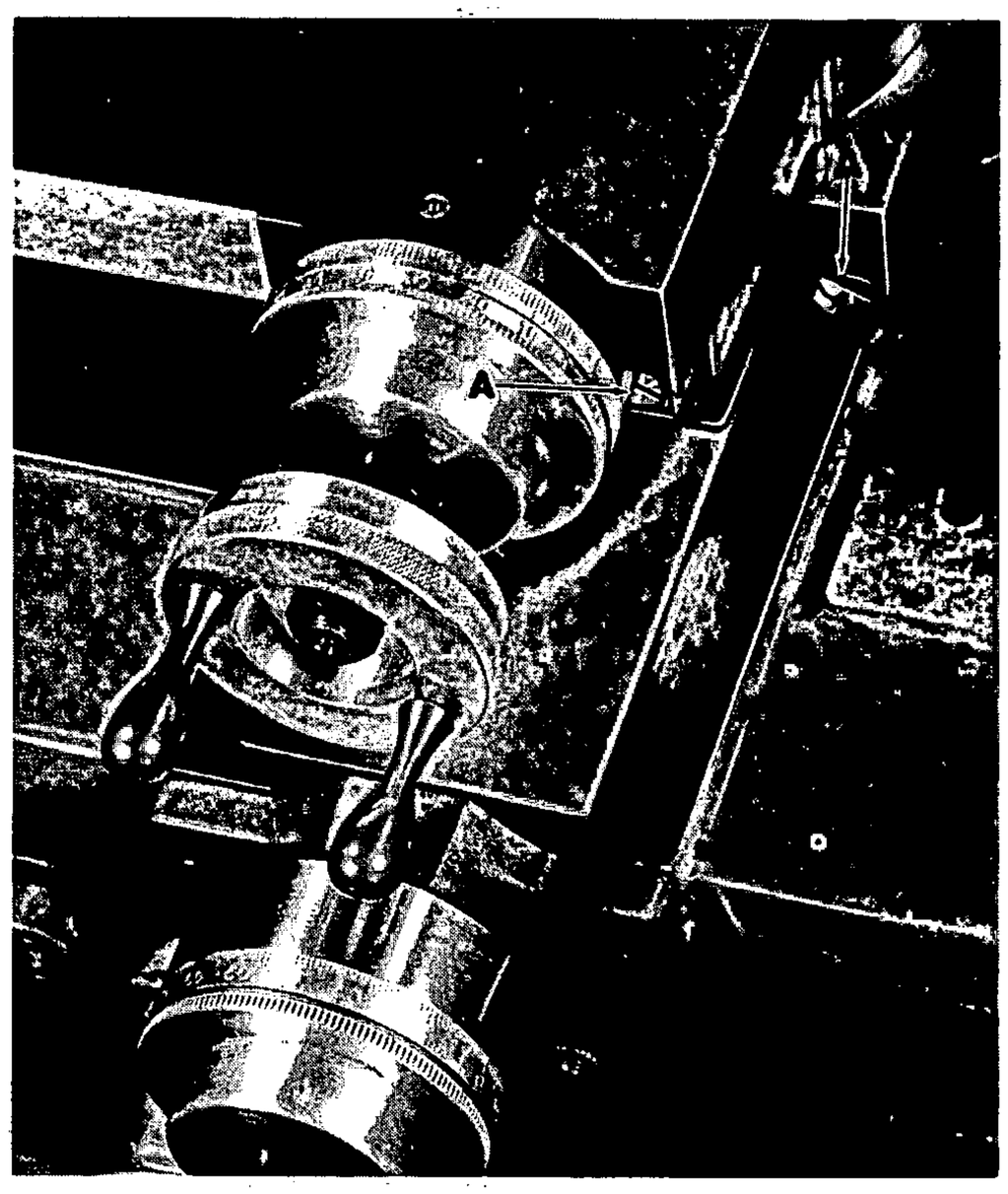

Figure 17

3. Turn front adjusting screw (A, fig. 17) until tight, then back off about one-half turn -- slide should move with a slight drag.
4. Retighten the rear adjusting screw.

TENSIONING TIMING BELT

1. Loosen slightly the four hex nuts holding the countershaft bracket to pedestal.
2. With a soft hammer, tap on bottom or top of countershaft bracket until belt is properly tensioned.

   NOTE: Properly tensioned, timing belt should depress approximately ½" with light finger pressure – too much tension causes excessive wear.
3. Measure to make sure that points (C & D, Fig. 16) on countershaft bracket are the same distance from top of head pedestal.
4. Tighten the four hex nuts securely.
5. Recheck belt tension.

REPLACING SHEAR PIN IN LEAD SCREW

Shear pin, located at gear box end of lead screw, protects lead screw and gear box against overload. To replace broken shear pin:

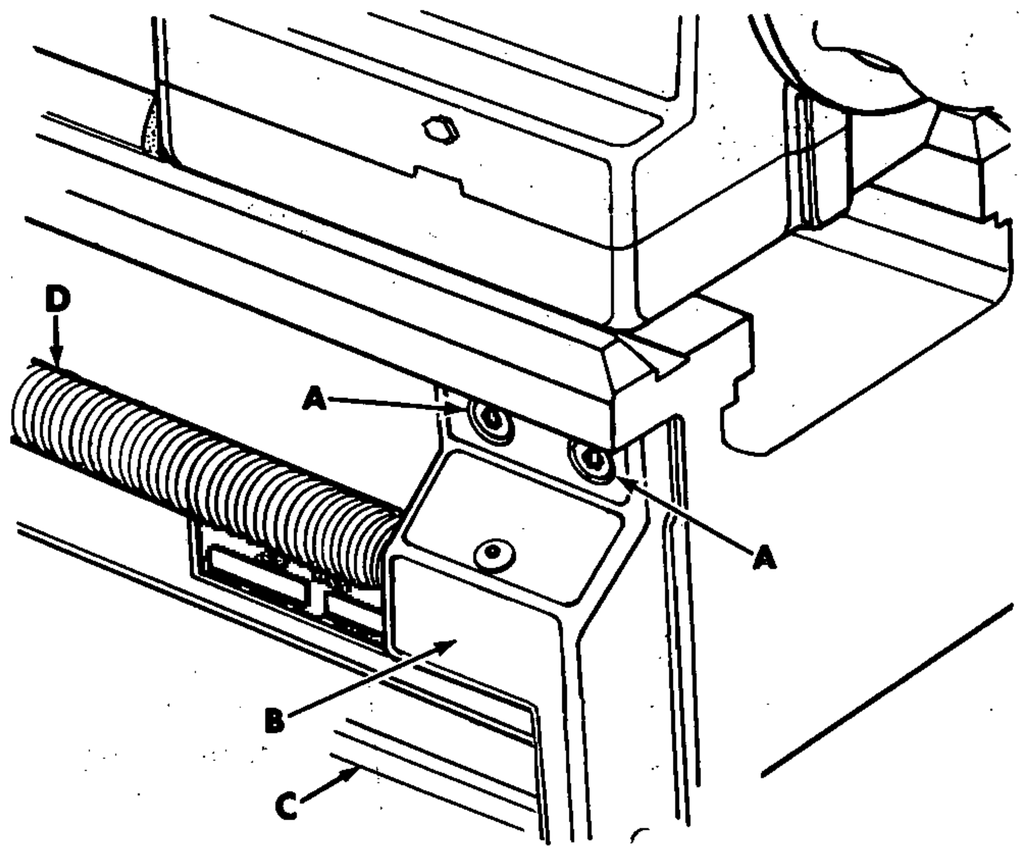

Figure 18

1. Remove two socket cap screws (A, fig. 18) from lead screw bracket (B). Remove bracket from lead screw (D) and clutch rod (C).
2. Engage half-nuts, turn carriage handwheel toward tailstock, pulling lead screw from gear box shaft. Disengage half-nuts and remove lead screw.

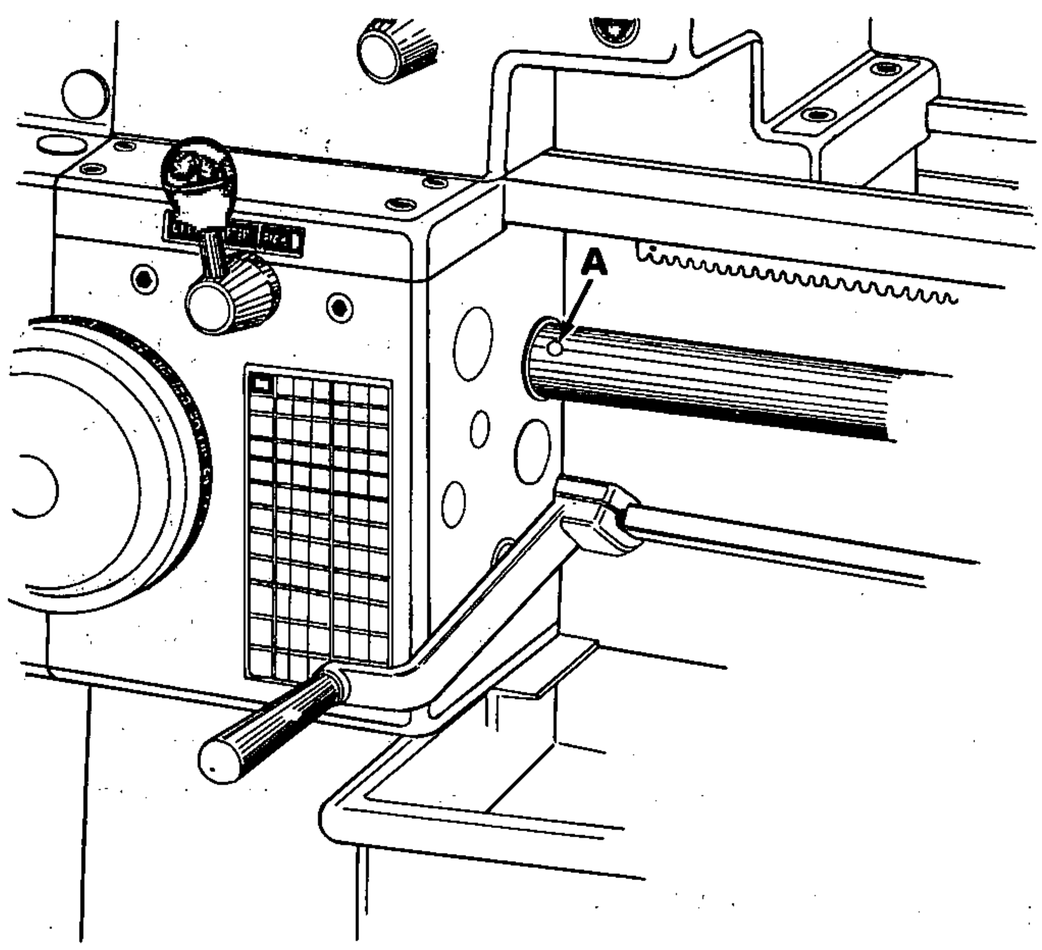

Figure 19

3. Remove sheared pin (A, fig. 19) from gear box shaft and lead screw.
4. Slide lead screw over gear box shaft -- check alignment of shear pin holes with punch -- turning lead screw 180° if necessary -- and install new shear pin with retainer.
5. Replace lead screw bracket - - CAUTION: Do not tighten the two socket cap screws.
6. Move carriage to tailstock end of bed, engage half-nuts to align lead screw and clutch rod, then tighten the two socket cap screws.

ADJUSTING SPINDLE BEARINGS

Spindle bearings have been preloaded at factory and seldom require adjusting. Follow these instructions should adjustment be necessary:

1. Make adjustment only when spindle is at operating temperature - - run spindle at medium speed for one hour with 8" driving plate mounted on spindle.
2. Disengage back gear pin from drive pulley by pulling pin away from headstock.
3. Turn back gear knob to the right.
4. Move lead screw direction knob to vertical (NEUTRAL) position.
5. Give driving plate a sharp spin with your hand.

   NOTE: If preload is correct - - drive plate should rotate about one turn.

To adjust:

1. Remove spindle handwheel and upper belt guard.

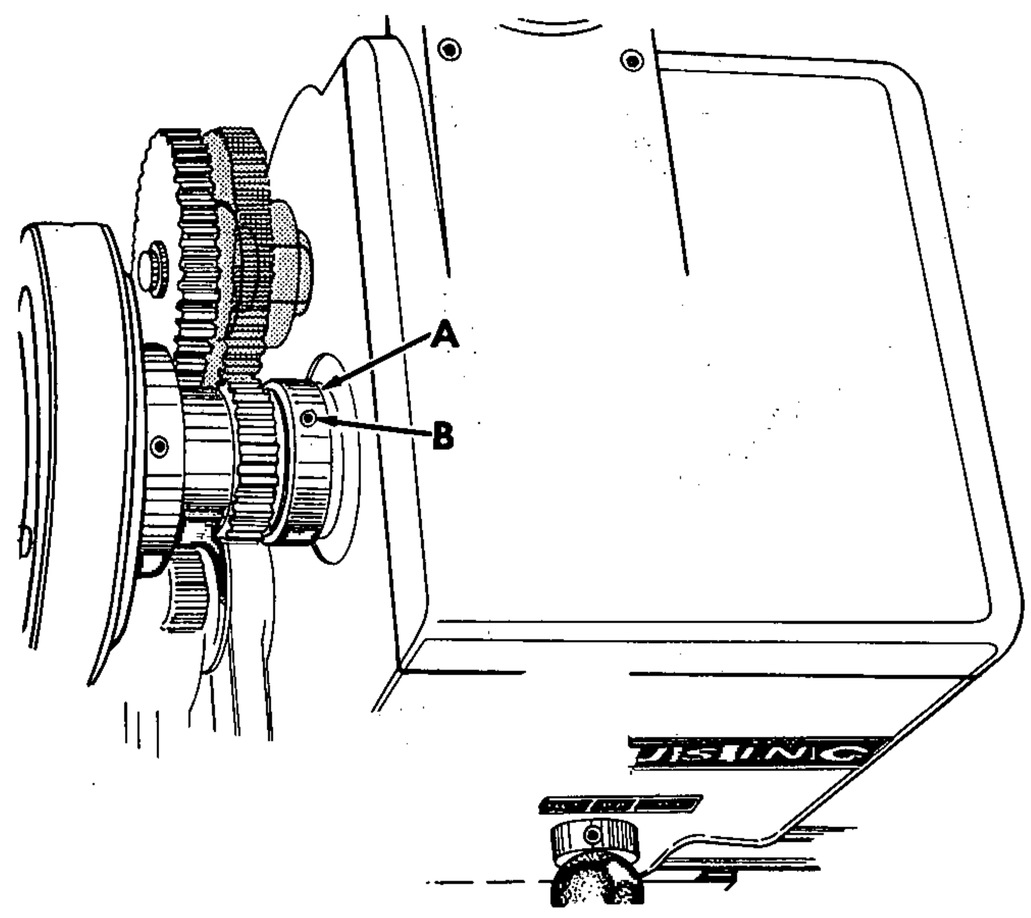

Figure 20

2. Loosen set screw (B) (fig. 20) in bearing adjusting nut (A) and tighten nut with spanner wrench until spindle end play has been removed.
3. Give driving plate a sharp spin with your hand -- drive plate should rotate about one turn. If it doesn't, adjust nut (A) and recheck.
4. Tighten set screw (B) in adjusting nut.
5. Replace guard and handwheel.

REPLACING VARIABLE SPEED BELT

1. With lathe running, turn variable dial to highest speed -- 1650 rpm in open belt or 230 rpm in back gear. Then turn off motor.

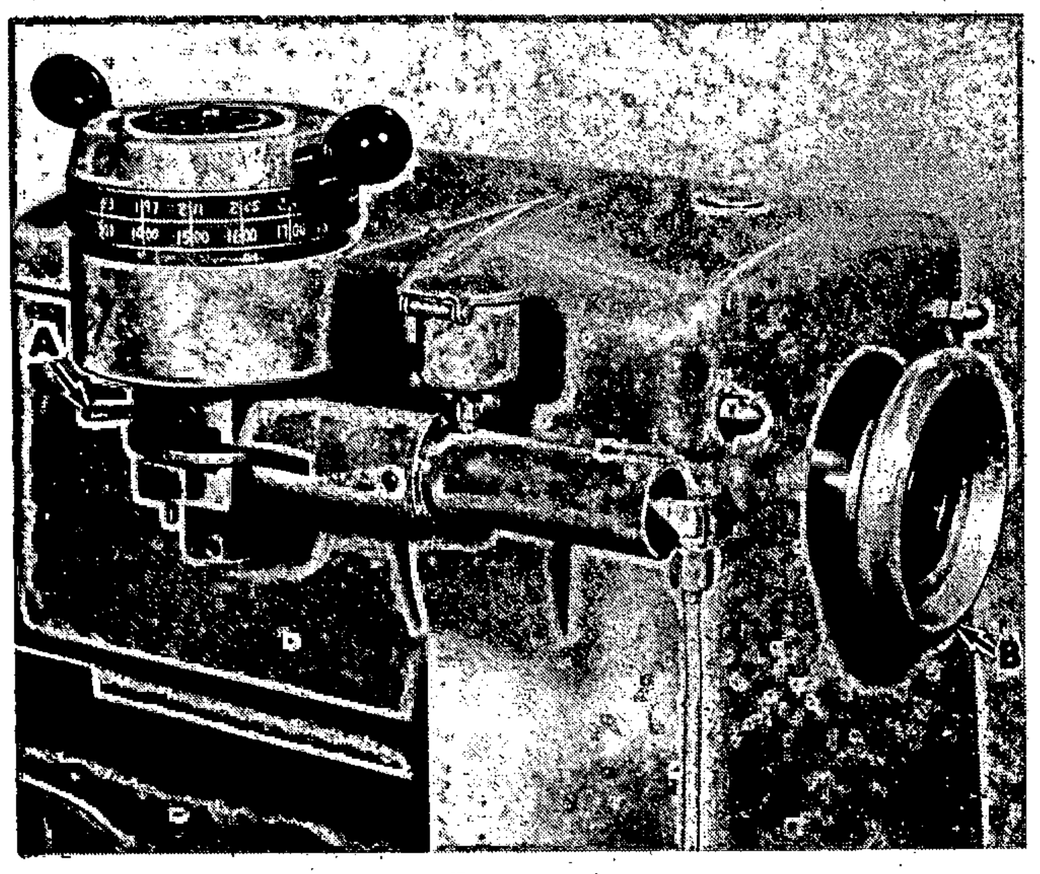

Figure 21

2. Remove spindle handwheel (B) (fig. 21), belt guards and front cover.

3. Turn variable dial back to lowest speed and lock dial in place with pin (A).

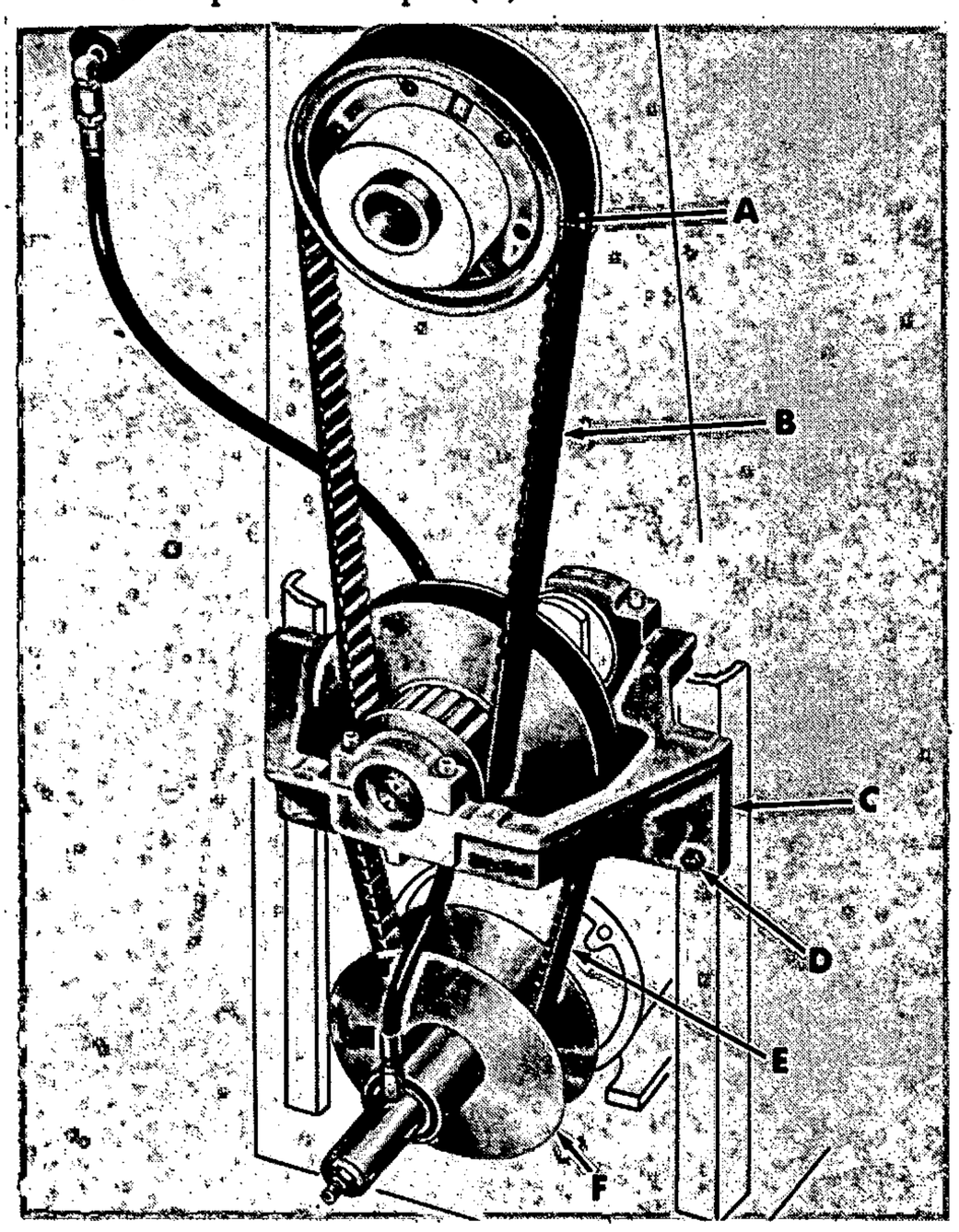

Figure 22

4. Holding variable dial against low speed stop, pull on outer sheave of lower variable motor pulley (F) (fig. 22) until variable belt (E) is loose.

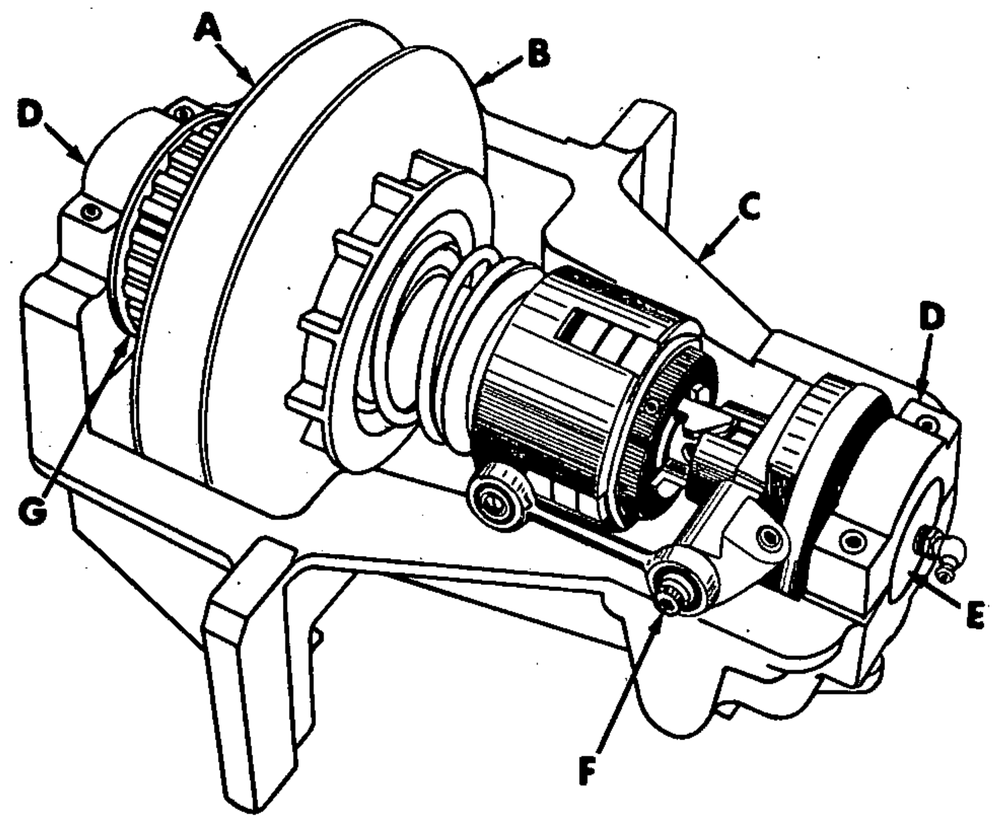

Figure 23

5. Thru front cover opening, remove 5/16"-18 hex cap screw (F) (fig. 23) and spacer from clutch linkage.

6. Remove four hex nuts (D) (fig. 22). Raise countershaft (C) slightly and slip timing belt (B) off spindle pulley (A). Lower countershaft and slip variable belt (E) off variable motor pulley (F).

7. Place countershaft on bench.

8. Remove bearing caps (D) (fig. 23), snap rings and countershaft spindle (E) from bracket (C).

9. Twist variable belt off countershaft pulley. CAUTION: Variable pulley is spring loaded and will snap closed when belt is removed.

10. Place new variable belt on countershaft pulley.

11. Install spindle in countershaft bracket and secure in place with snap rings and bearing caps (D).

    IMPORTANT: Make sure timing belt is in place before installing bearing caps.

12. Standing on countershaft bracket, pull variable belt into bottom of variable pulley sheaves (A & B).

13. Position the countershaft (C) (fig. 22) so variable belt (E) can be slipped on motor pulley (F), then raise countershaft so timing belt (B) can be slipped on spindle pulley (A).

14. Place countershaft assembly on the four mounting studs (D), then snug up the four hex nuts. Refer to Tensioning Timing Belt steps 2-5.

15. Thru front cover opening, install 5/16"-18 hex cap screw and spacer in clutch linkage.

16. Remove lock pin (A, fig. 21) from variable cam housing.

17. Start lathe motor.

18. Hold variable control against low speed stop for 30 seconds, then turn through entire range.

19. Check adjustment of variable drive belt -- refer to ADJUSTING VARIABLE DRIVE BELT.

20. Replace belt guards and front cover.

ADJUSTING VARIABLE DRIVE BELT

With motor on, turn variable control dial to HIGHEST SPEED -- use a tachometer to check spindle speed.

If tachometer doesn't register approximately 1650 rpm:

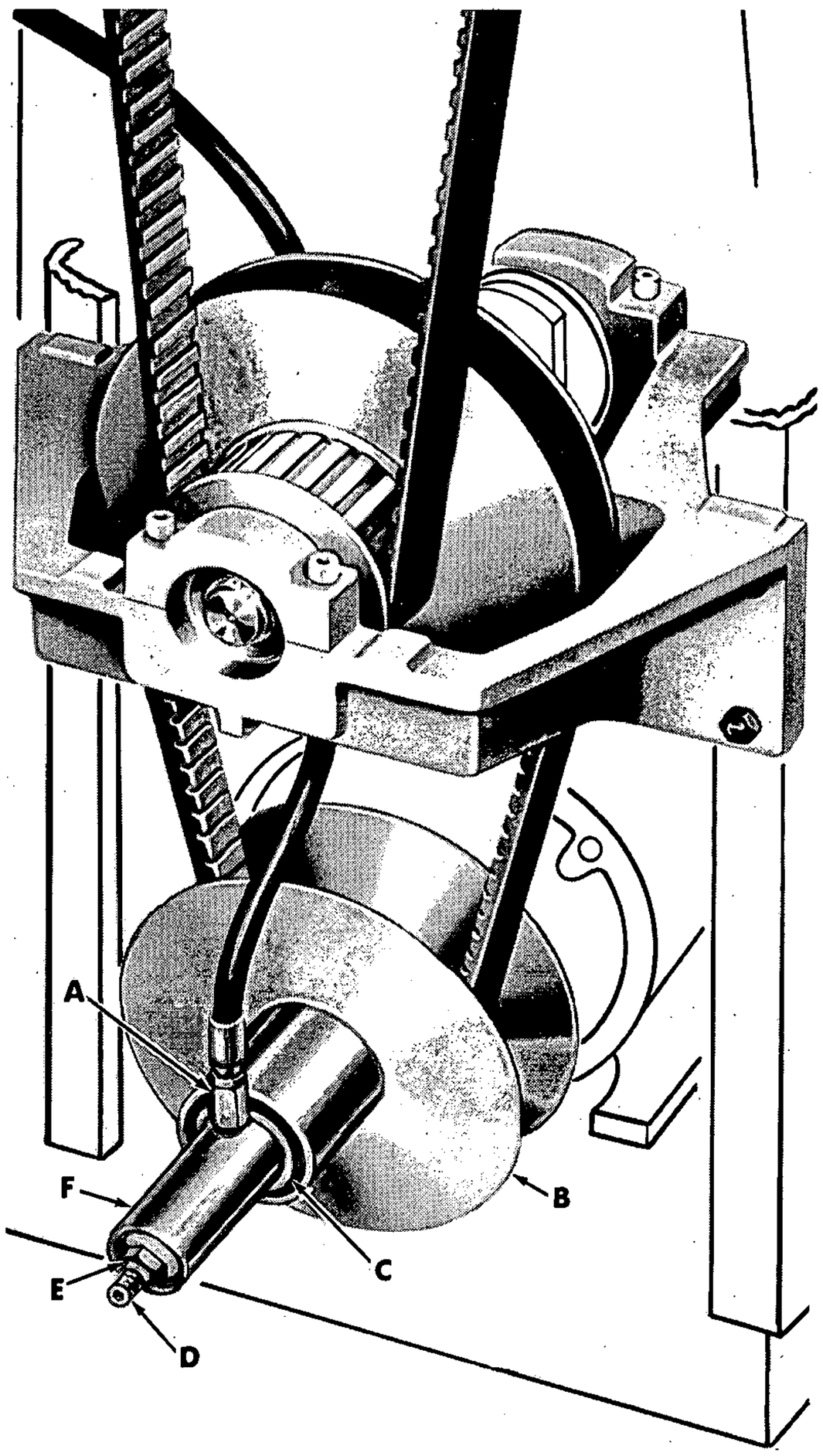

Figure 24

1. Hold nut (E, fig. 24) with wrench, and turn shaft (D) with a socket set screw wrench -- clockwise if speed is too low, counter-clockwise if speed is too high.

If tachometer is not available: Belt should be flush with out side of motor pulley at high speed and flush with outside of countershaft pulley at low speed.

Motor base brackets are bolted and doweled for permanent alignment.

REPLACING TIMING BELT

1. With lathe running, turn variable dial to highest speed -- 1650 rpm in open belt or 230 rpm in back gear. Then turn off motor.

2. Remove spindle handwheel (B) (fig. 21), belt guards and front cover.

3. Turn variable dial back to lowest speed and lock dial in place with pin (A).

4. Pull on outer sheave of lower variable motor pulley (F) (fig. 22) until variable belt (E) is loose.

5. Thru front cover opening, remove 5/16"-18 hex cap screw (F) (fig. 23) and spacer from clutch linkage.

6. Remove four hex nuts (D) (fig. 22). Raise countershaft (C) slightly and slip timing belt (B) off spindle pulley (A). Lower countershaft and slip variable belt (E) off variable motor pulley (F).

7. Place countershaft on bench.

8. Remove bearing caps (D) (fig. 23), snap rings and countershaft spindle (E) from bracket (C).

9. Remove timing belt from countershaft pulley (G).

10. Place new timing belt on countershaft pulley (G).

11. Install spindle in countershaft bracket and secure in place with snap rings and bearing caps (D). IMPORTANT: Make sure variable belt is in place before installing bearing caps.

12. Position the countershaft (C) (fig. 22) so variable belt (E) can be slipped on motor pulley (F), then raise countershaft so timing belt (B) can be slipped on spindle pulley (A).

13. Place countershaft assembly on the four mounting studs (D), then snug up the four hex nuts. Refer to Tensioning Spindle Belt steps 2-5.

14. Thru front cover opening, install 5/16"-18 hex cap screw and spacer in clutch linkage.

15. Remove lock pin (A, fig. 21) from variable cam housing.

16. Start lathe motor.

17. Hold variable control against low speed stop for 30 seconds, then turn through entire range.

18. Replace belt guards and front cover.

REPLACING UPPER VARIABLE CONTROL CYLINDER

1. With lathe running, turn variable speed dial to highest range (230 or 1650 rpm), then turn motor off.

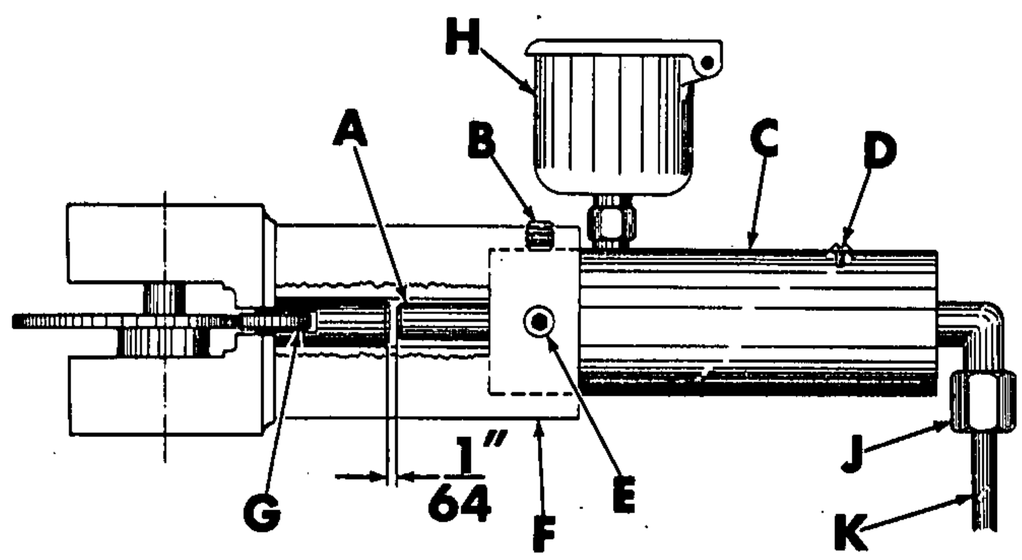

Figure 25

2. Remove nut (J, fig. 25) on end of variable control cylinder -- catching oil in pan.
3. Remove set screws (B) and (E) in variable cam housing (F).
4. Pull out upper variable control cylinder (C).
5. Remove the oil from old variable control cylinder oil reservoir (H).
6. While holding variable speed dial against low speed stop, slide new control cylinder (C) into variable housing (F) until variable plunger (A) is about 1/64" from cam roller plunger (G). Lock in place with set screws (B) and (E).
7. Install hydraulic line (K) and tighten nut (J).
8. Remove bleeder screw (D) and fill oil reservoir.
9. Keeping oil reservoir filled, hold variable dial against low speed stop until oil runs out bleeder hole – it takes a few minutes for oil to run down.
10. Replace bleeder screw (D).
11. Start lathe motor. Hold variable control against low speed stop for 30 seconds – turn variable dial to highest speed – then back to lowest speed. Control should stay at 43 rpm.

NOTE: Watch dial for a few seconds. If it doesn't remain at 43 rpm, the hydraulic system must be bled to remove trapped air.

To remove air from hydraulic system:

A. Run variable to highest speed.
B. Loosen bleeder screw (D, fig. 25) a few turns until oil starts coming out around the screw.
C. Retighten bleeder screw.
D. Turn variable dial to low speed stop and release – pointer should remain at 43 rpm.

NOTE: If dial moves, repeat steps A, B and C.

12. Permanently mark variable control cylinder location:

A. Remove set screw (E).
B. With a 1/4-inch drill, spot the cylinder for the 5/16" set screw (E).

NOTE: This drill mark simplifies future positioning of cylinder.

C. Replace set screw (E).

REPLACING LOWER VARIABLE CONTROL CYLINDER

1. With lathe running, turn variable speed dial to highest range (230 or 1650). Then, turn motor off.
2. Measure distance from end of shaft (D, fig. 24) to nut (E). NOTE: *Record this dimension.*
3. Disconnect fitting (A) and drain oil from unit.
4. While holding shaft (D) with a socket set screw wrench, remove nut (E) and washer.
5. Remove, sleeve from hydraulic cylinder.
6. Pull hydraulic cylinder (F) and outer half of variable pulley (B) off the shaft (D) and remove stop washer from pulley (B).
7. Press hydraulic cylinder (F) with bearing (C) from variable pulley (B).
8. Replace the two "O" rings on shaft (D).
9. Install stop washer in pulley (B).
10. Press new hydraulic cylinder with bearing into variable pulley hub (B), then slide the assembly onto shaft (D) and pulley hub.
11. Install sleeve and washer on shaft (D).
12. Start nut (E) on shaft (D).
13. Hold the shaft in place with a socket set screw wrench and then turn nut onto rod until distance from the end shaft (D) to nut (E) is the same as step 3.
14. Start fitting (A) onto hydraulic cylinder (F).
15. Fill oil reservoir.
16. Keep oil reservoir filled, hold variable dial against low speed stop until oil runs out around fitting (A) – it takes a few minutes for oil to run down.
17. Tighten fitting (A).
18. Start lathe motor. Hold variable control against low speed stop for 30 seconds – turn variable dial to highest speed – then back to lowest speed a few times. Control should stay at 43 rpm.

NOTE: Watch dial for a few seconds. If it doesn't remain at 43 rpm, the hydraulic system must be bled to remove trapped air.

To remove air from hydraulic system:

A. Run variable to highest speed.
B. Loosen bleeder screw (D, fig. 25) a few turns until oil starts coming out around the screw.
C. Retighten bleeder screw.
D. Turn variable dial to low speed, stop and release – pointer should remain at 43 rpm.

NOTE: If dial moves, repeat steps A, B, and C.

PARTS INDEX

For Lathes From Serial No. 600342 To 602127

Cabinet 18.1
Bed 19.1
Headstock Casting and Gear Train Guard 20.1
Headstock 21.1
Quick-Change Gear Box 22
Gear Train 23
Electrical Assembly 24
Countershaft 25.1
Countershaft with Clutch and Brake 26.1
Motor Base Assembly 27
Variable Speed Control 28
Variable Speed Motor Pulley 29.2
Cross Slide 30.2
Carriage 31
Apron ..... 32 & 33.1
Tailstock 34.2

INSTRUCTIONS FOR ORDERING REPAIR PARTS

It is important to furnish the following information in addition to QUANTITY required:

1. PART NUMBER

2. PART NAME

3. MODEL and SERIAL NUMBER of machine tool -- you'll find both on the metal plate attached to machine -- note illustration below.

NOTE: Screws and nuts shown without part numbers should be purchased locally.

We reserve the right to make changes in design and specifications without notice.

CABINET ASSEMBLY

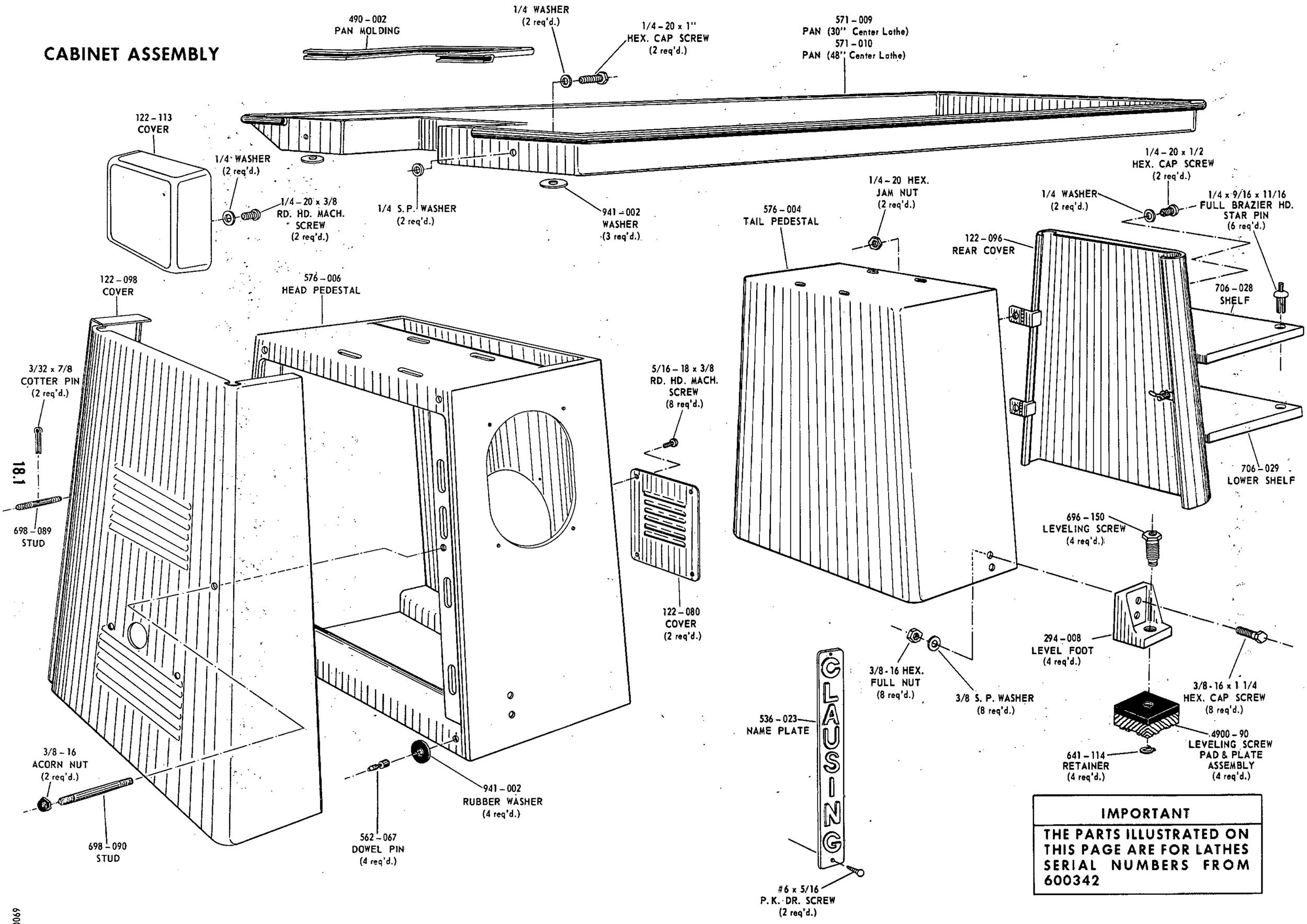

IMPORTANT

THE PARTS ILLUSTRATED ON THIS PAGE ARE FOR LATHES SERIAL NUMBERS FROM 600342

BED ASSEMBLY

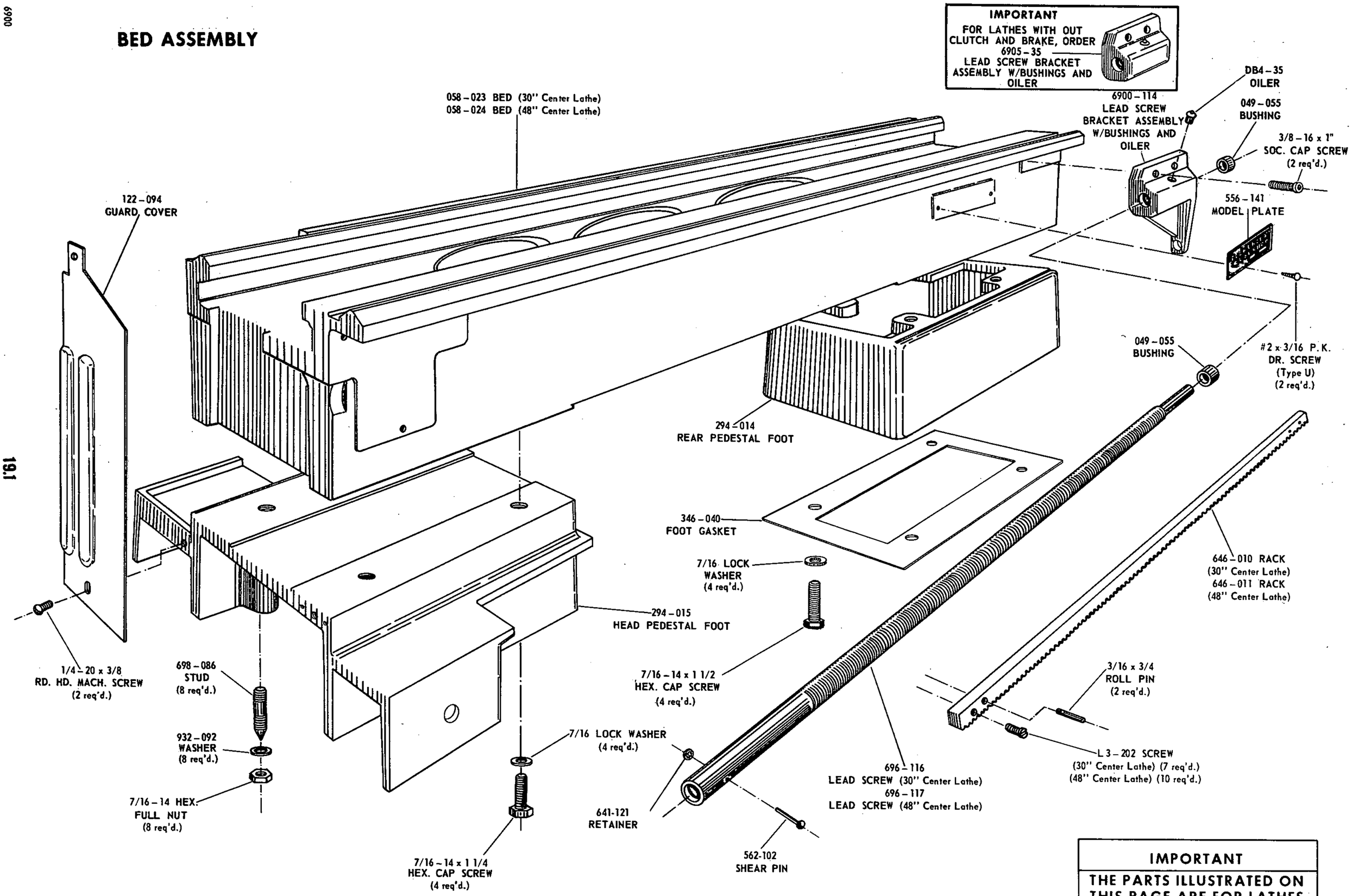

IMPORTANT

THE PARTS ILLUSTRATED ON THIS PAGE ARE FOR LATHES SERIAL NUMBERS FROM 600200

HEADSTOCK AND GEAR TRAIN GUARD ASSEMBLY

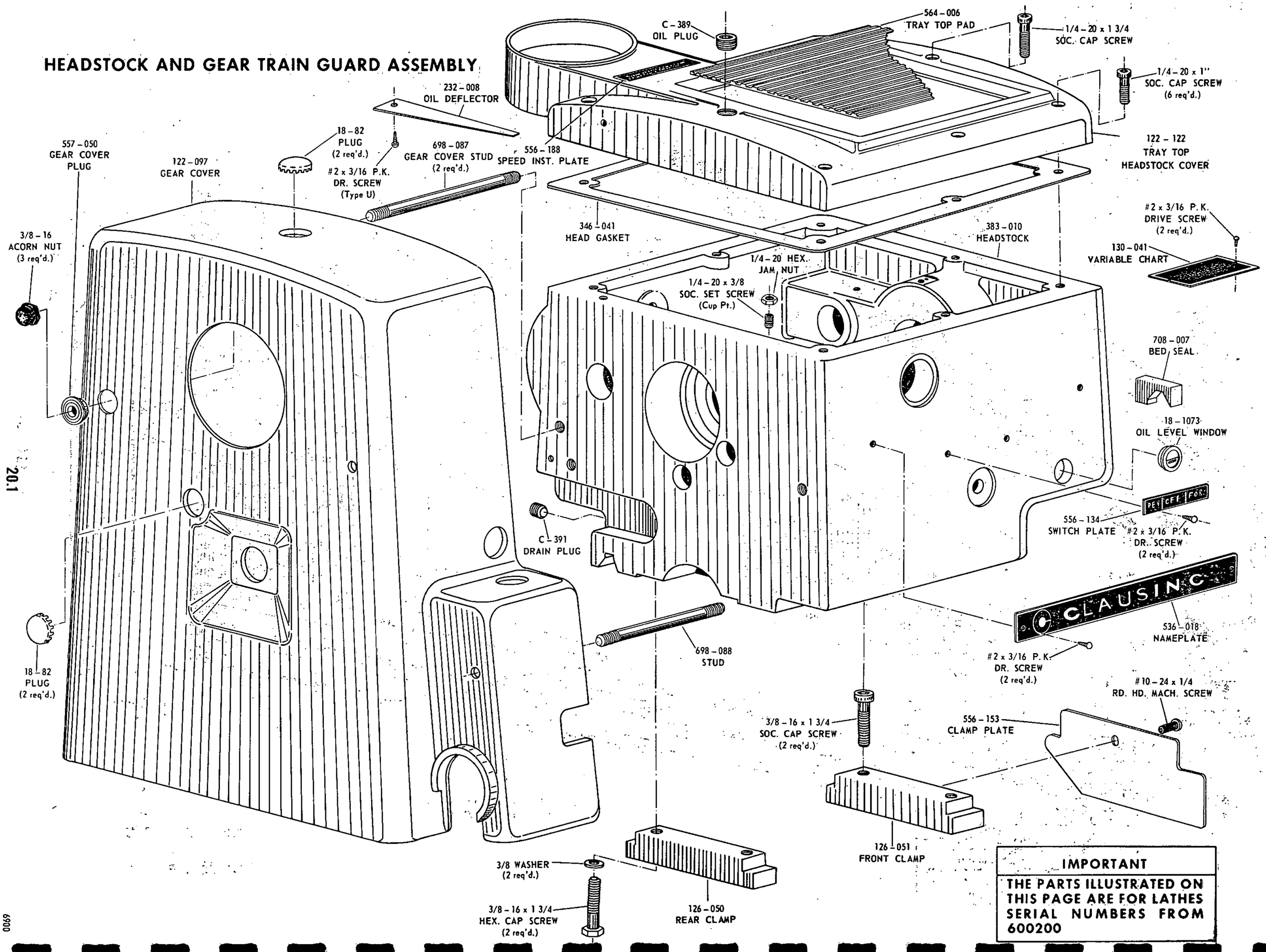

IMPORTANT

THE PARTS ILLUSTRATED ON THIS PAGE ARE FOR LATHES SERIAL NUMBERS FROM 600200

HEADSTOCK ASSEMBLY

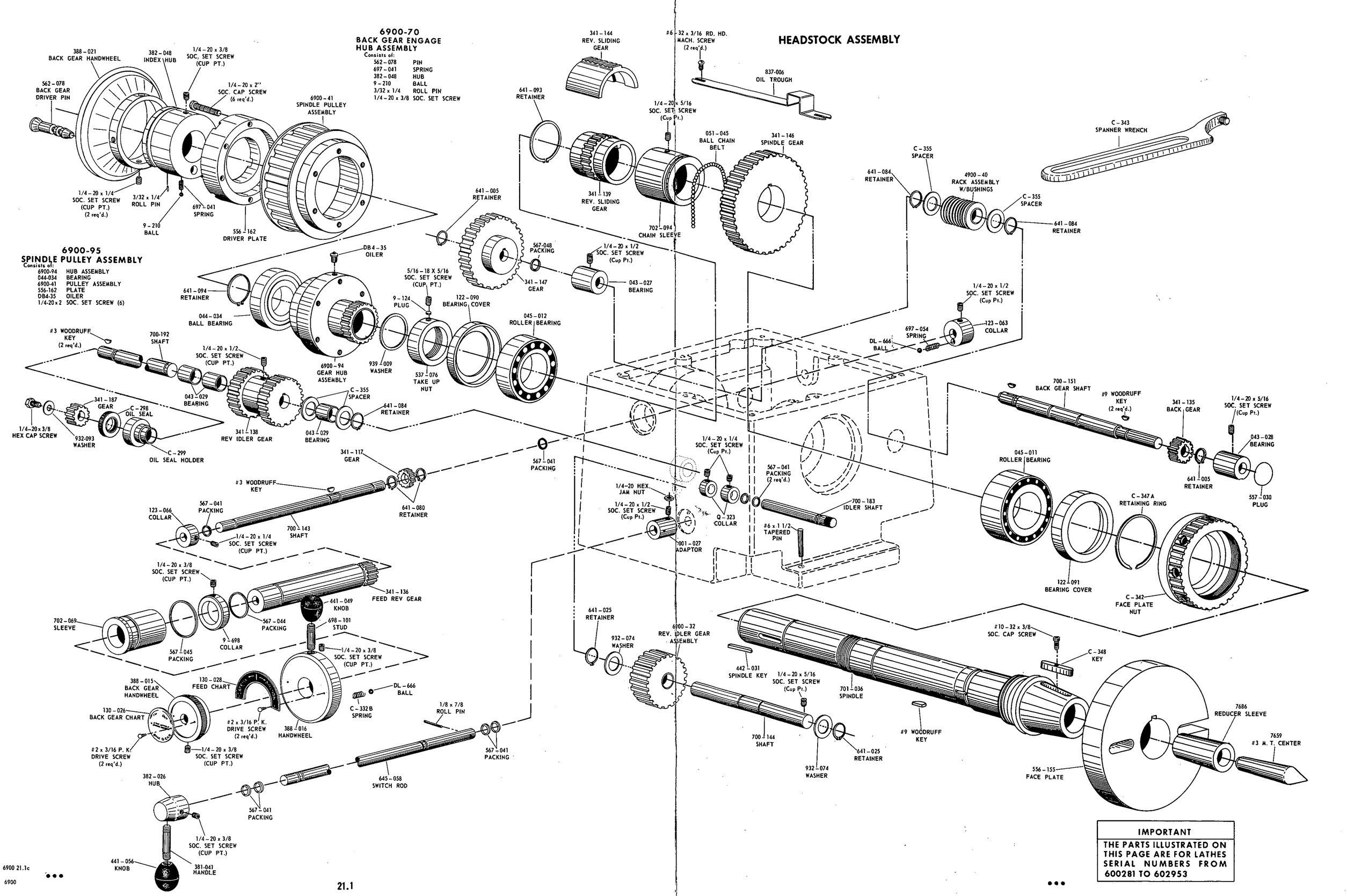

IMPORTANT

THE PARTS ILLUSTRATED ON THIS PAGE ARE FOR LATHES SERIAL NUMBERS FROM 600281 TO 602953

QUICK CHANGE GEAR BOX ASSEMBLY

6900-500

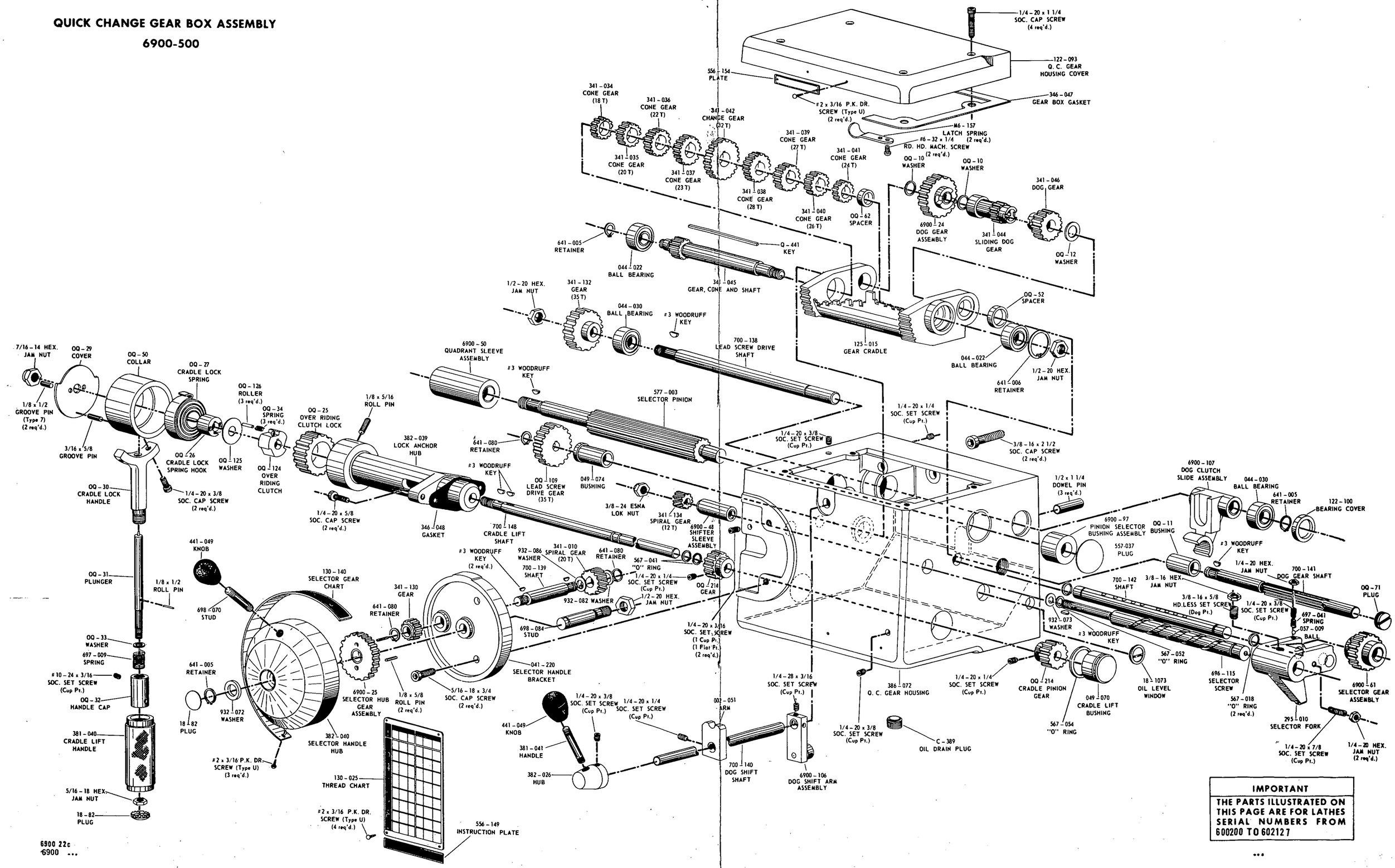

IMPORTANT

THE PARTS ILLUSTRATED ON THIS PAGE ARE FOR LATHES SERIAL NUMBERS FROM 600200 TO 602127

6900 22c
6900 ...

QUADRANT ASSEMBLY
6900-501

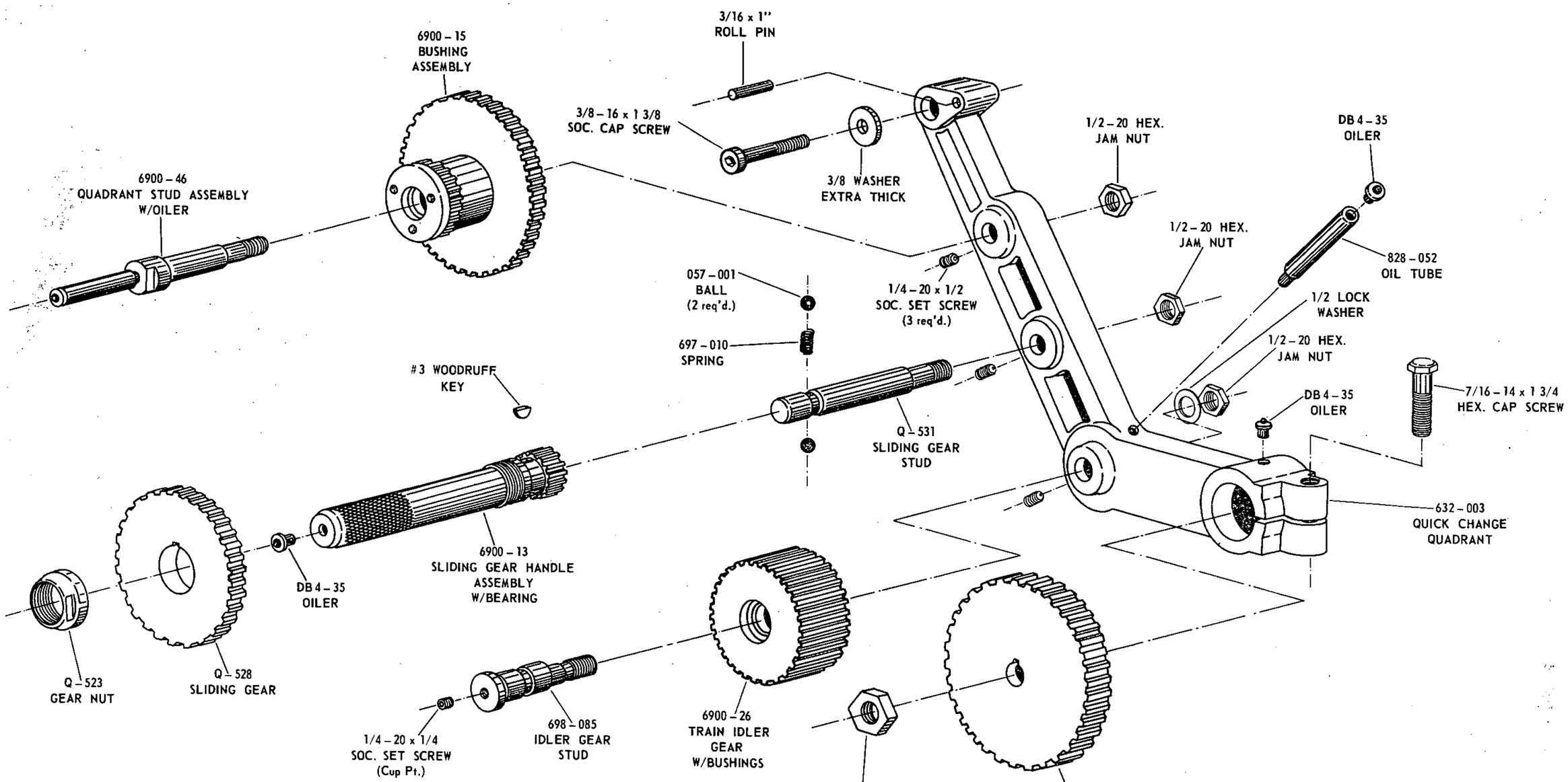

6900-14
SLIDING GEAR ASSEMBLY

Consists of:

6900 – 13	GEAR ASSEMBLY
Q – 523	NUT
Q – 528	GEAR
DB 4 – 35	OILER
#3	WOODRUFF KEY

IMPORTANT

THE PARTS ILLUSTRATED ON THIS PAGE ARE FOR LATHES SERIAL NUMBERS FROM 600200

ELECTRICAL ASSEMBLY

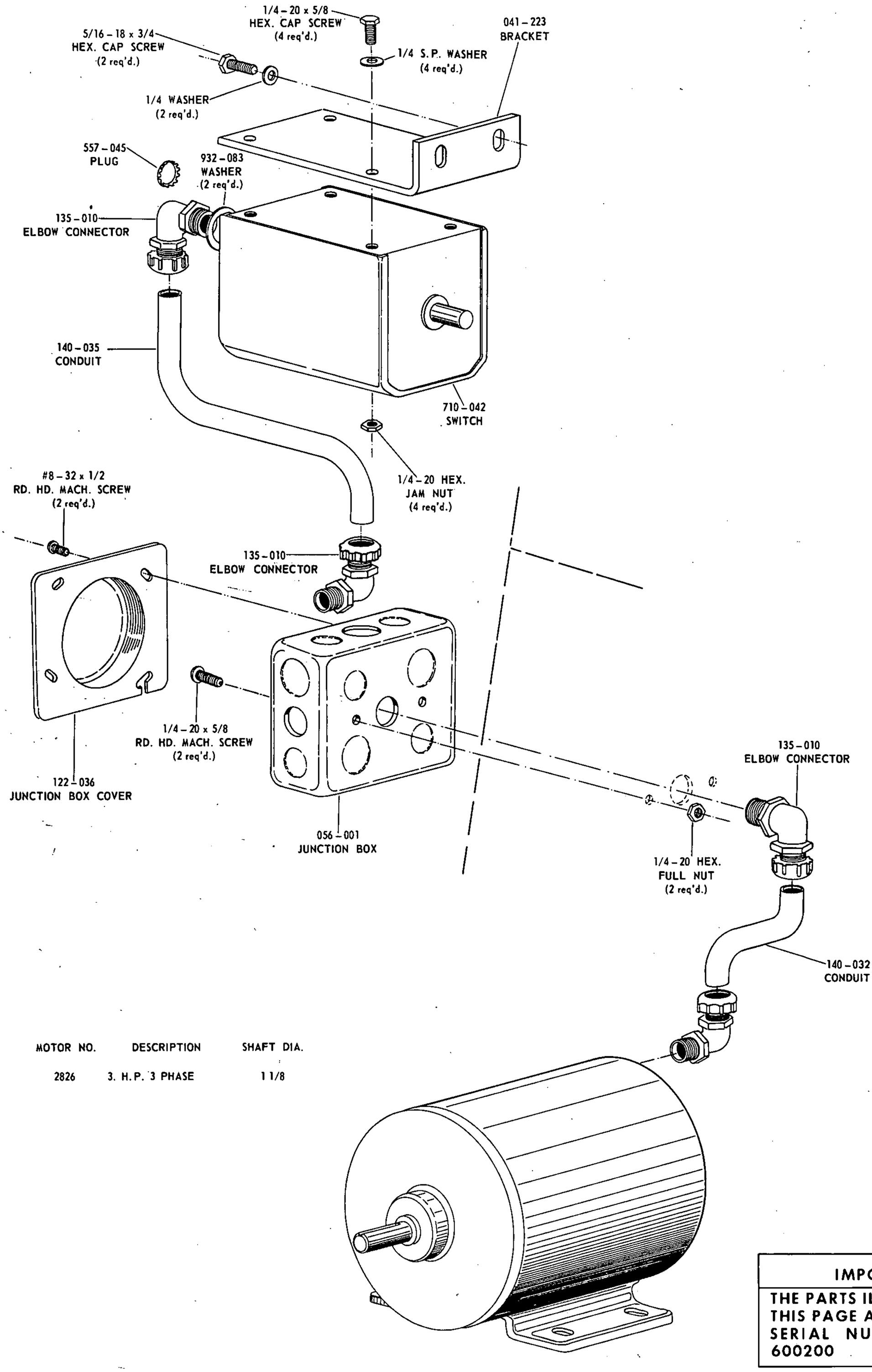

MOTOR NO.	DESCRIPTION	SHAFT DIA.
2826	3. H.P. 3 PHASE	1 1/8

IMPORTANT

THE PARTS ILLUSTRATED ON THIS PAGE ARE FOR LATHES SERIAL NUMBERS FROM 600200

COUNTERSHAFT 6900-502

6905-45 C'SHAFT ASSEMBLY W/O CLUTCH

Consists of:

051 – 038	VARIABLE BELT
051 – 047	TIMING BELT
641 – 051	RETAINER (2)
6900 – 28	C'SHAFT BRACKET ASSEMBLY
6905 – 42	C'SHAFT SPINDLE ASSEMBLY

6905-42 C'SHAFT SPINDLE ASSEMBLY

Consists of:

044 – 017	BEARING (2)
238 – 003	DRIVER
382 – 056	HUB
442 – 046	KEY
442 – 052	HUB KEY
442 – 053	DRIVER KEY
641 – 011	RETAINER (4)
641 – 086	RETAINER
699 – 138	SPACER
701 – 049	SPINDLE
6900 – 33	PULLEY ASSEM.
6900 – 119	C'SHAFT VARI. PULLEY ASSEM.
699 – 146	SPACER

6900-119 C'SHAFT VARI. PULLEY ASSEMBLY

Consists of:

6900 – 118	PULLEY-KEY ASSEM.
6900 – 34	SLIDING C'SHAFT PULLEY ASSEM.
697 – 046	SPRING
641 – 111	SPRING RETAINER
641 – 086	RETAINER
300 – 002	FAN

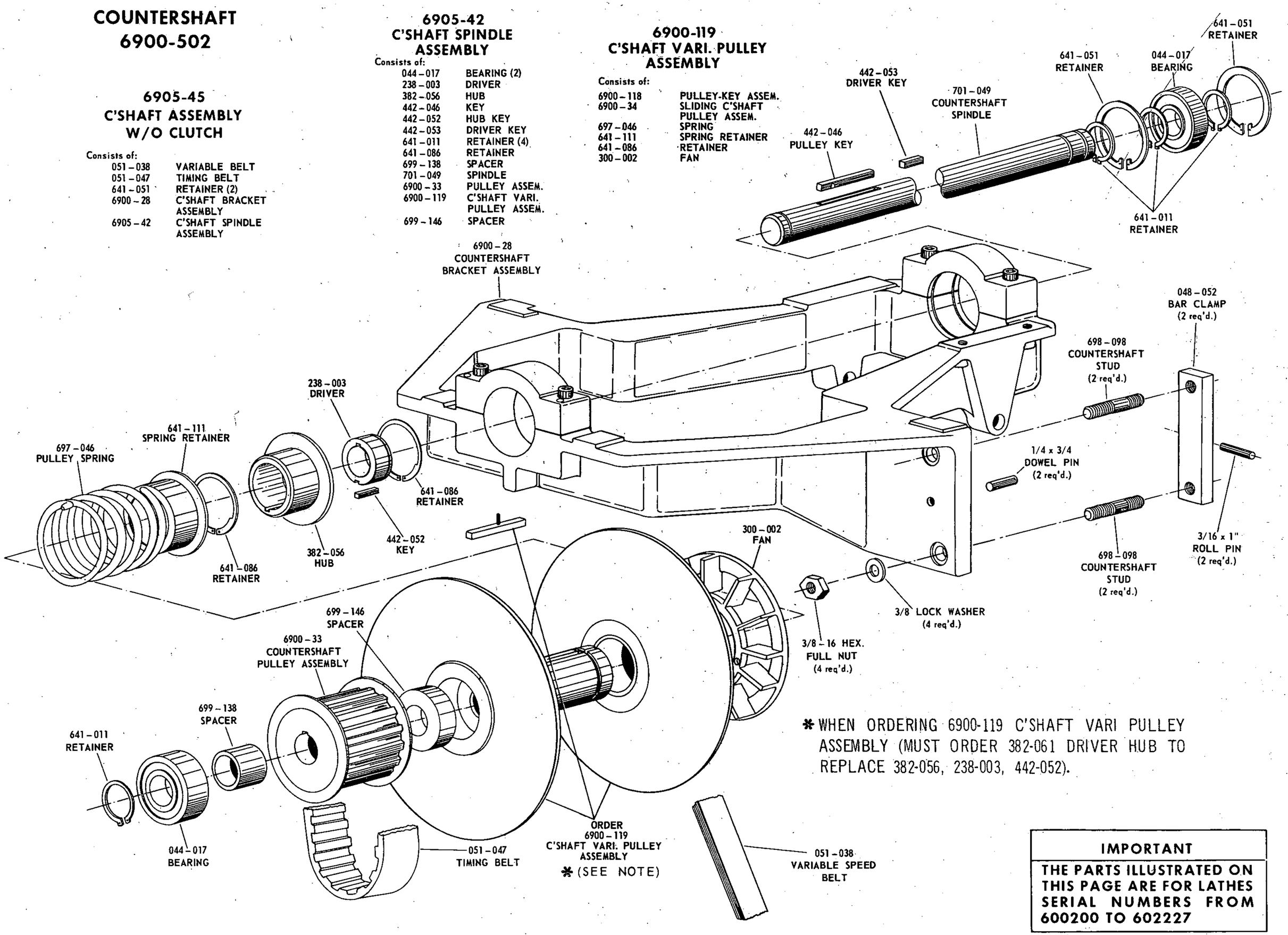

* WHEN ORDERING 6900-119 C'SHAFT VARI PULLEY ASSEMBLY (MUST ORDER 382-061 DRIVER HUB TO REPLACE 382-056, 238-003, 442-052).

IMPORTANT

THE PARTS ILLUSTRATED ON THIS PAGE ARE FOR LATHES SERIAL NUMBERS FROM 600200 TO 602227

COUNTERSHAFT W/CLUTCH AND BRAKE

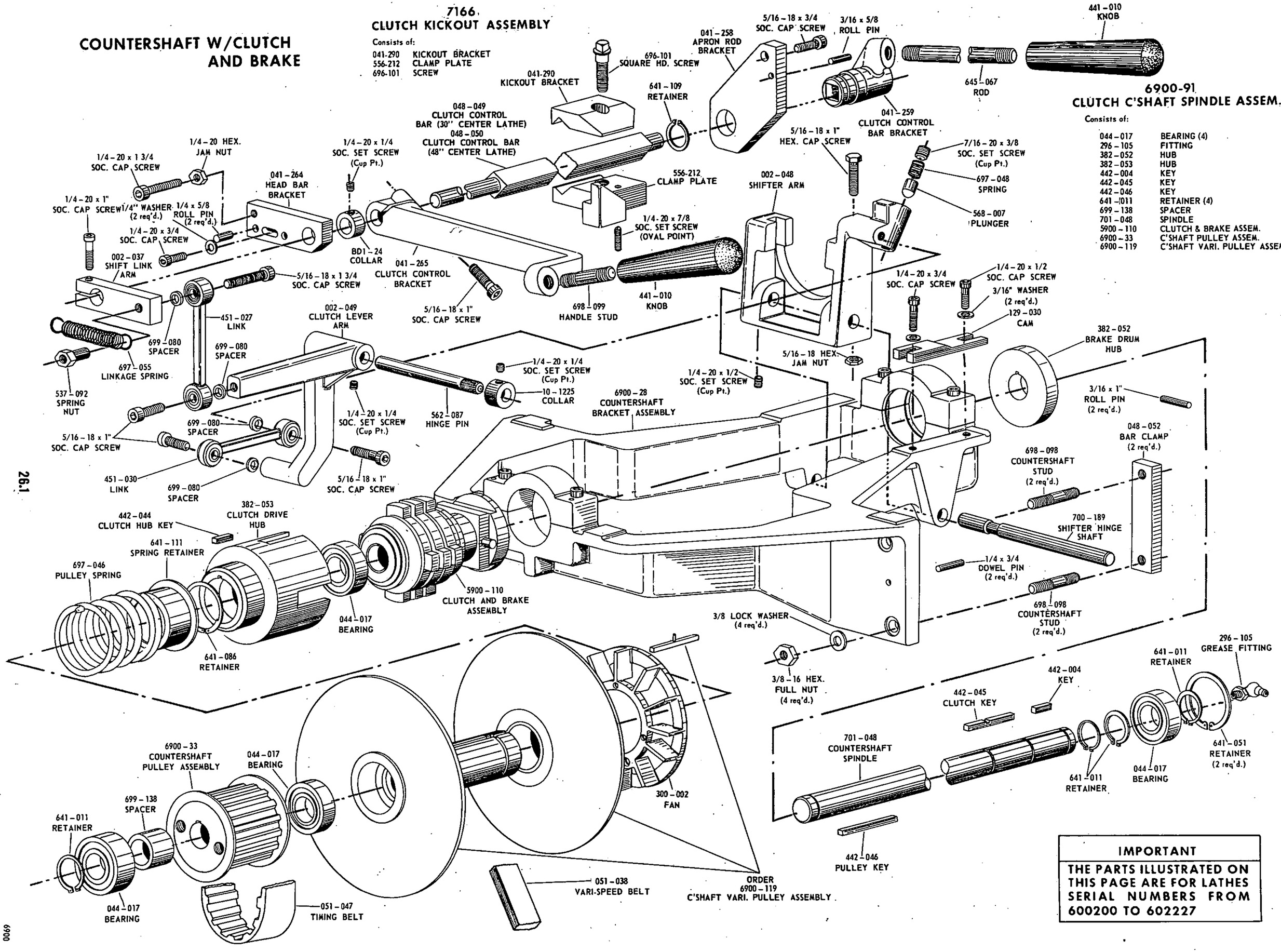

IMPORTANT

THE PARTS ILLUSTRATED ON THIS PAGE ARE FOR LATHES SERIAL NUMBERS FROM 600200 TO 602227

MOTOR BASE ASSEMBLY
6900-503

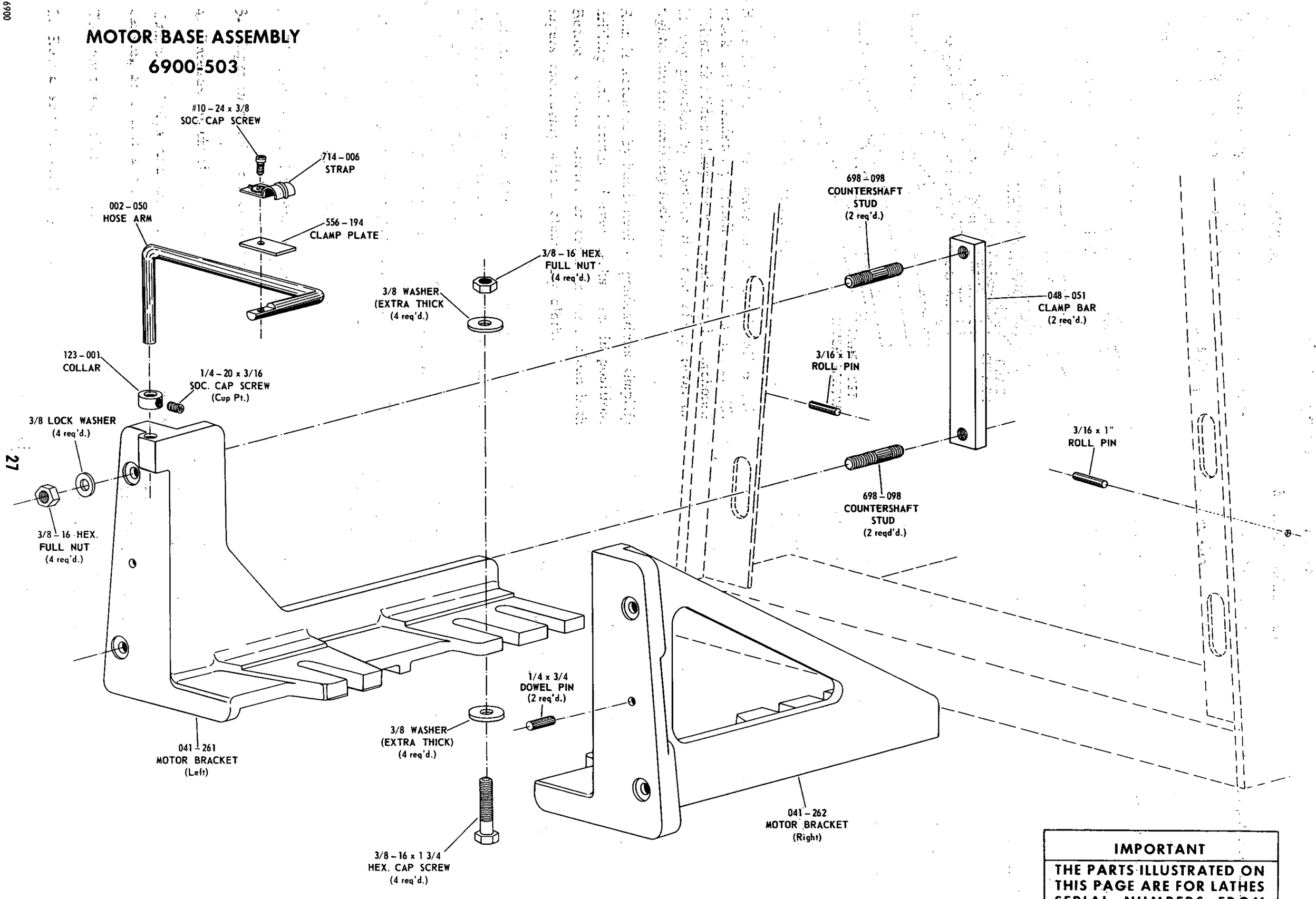

IMPORTANT

THE PARTS ILLUSTRATED ON THIS PAGE ARE FOR LATHES SERIAL NUMBERS FROM 600200

VARIABLE SPEED CONTROL

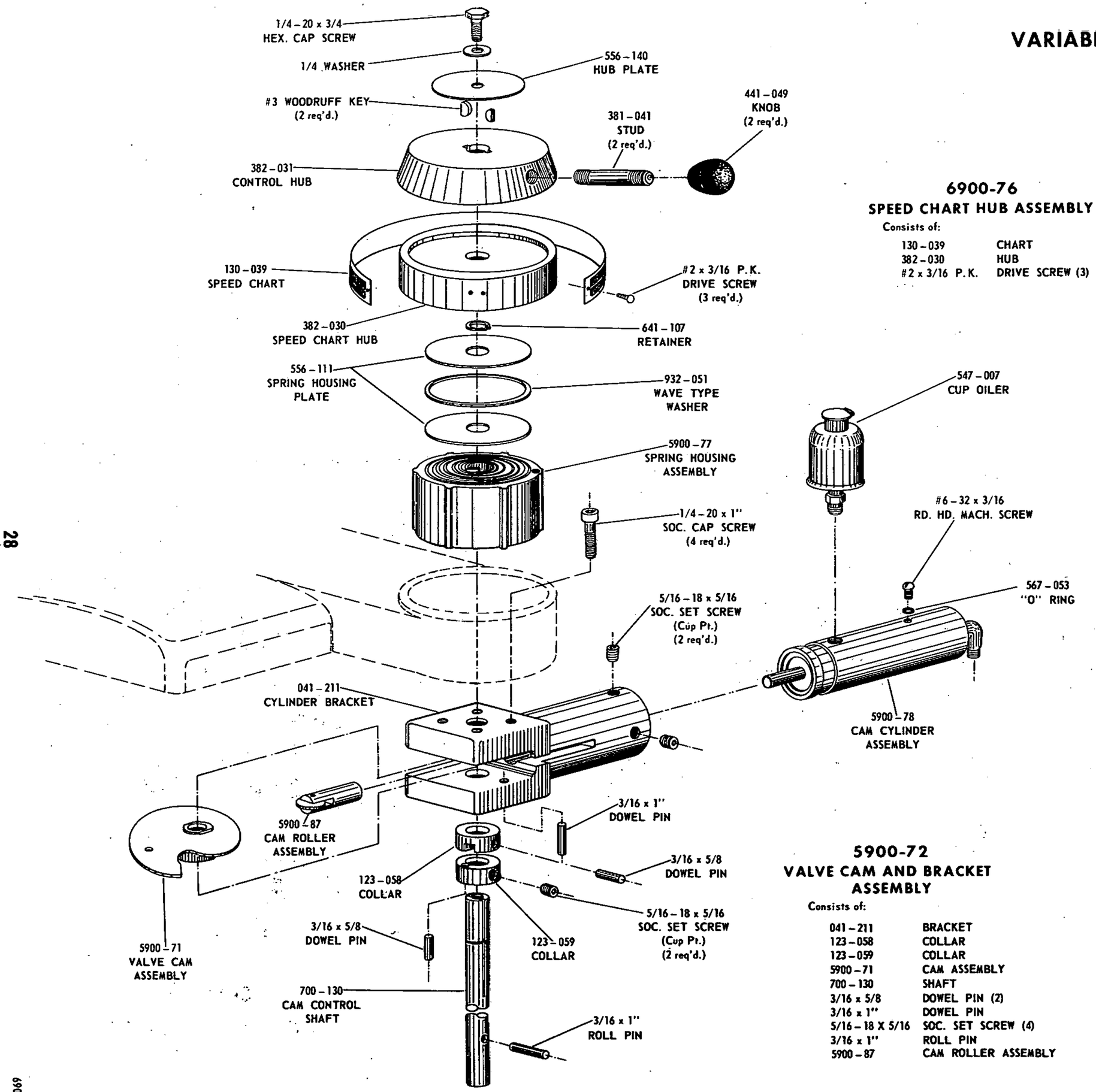

6900-76
SPEED CHART HUB ASSEMBLY

Consists of:

130 – 039	CHART
382 – 030	HUB
#2 x 3/16 P.K.	DRIVE SCREW (3)

5900-72
VALVE CAM AND BRACKET ASSEMBLY

Consists of:

041 – 211	BRACKET
123 – 058	COLLAR
123 – 059	COLLAR
5900 – 71	CAM ASSEMBLY
700 – 130	SHAFT
3/16 x 5/8	DOWEL PIN (2)
3/16 x 1"	DOWEL PIN
5/16 – 18 X 5/16	SOC. SET SCREW (4)
3/16 x 1"	ROLL PIN
5900 – 87	CAM ROLLER ASSEMBLY

IMPORTANT

THE PARTS ILLUSTRATED ON THIS PAGE ARE FOR LATHES SERIAL NUMBERS FROM 600200

INSTRUCTIONS and PARTS

CLAUSING

DIVISION, ATLAS PRESS COMPANY
KALAMAZOO, MICHIGAN 49001

INSTALLING CONVERSION MOTOR VARIABLE PULLEY CYLINDER ASSEMBLY

ON
CLAUSING
5900 SERIES LATHES UNDER
SERIAL NO. 505856
6900 SERIES LATHES UNDER
SERIAL NO. 602228

JUNE 1968 FILE NO. 5900-132-2

1.1
2.1

REMOVING MOTOR VARIABLE PULLEY HYDRAULIC CYLINDER

1. Remove lower drive guard cover.
2. With lathe running turn variable speed dial to highest speed (2000 for 5900 and 1650 for 6900).
3. Turn lathe off.

CAUTION: LATHE MUST BE IN HIGHEST RANGE

4. Disconnect fitting (A, fig. 1) and drain small amount of oil remaining in line, into container.

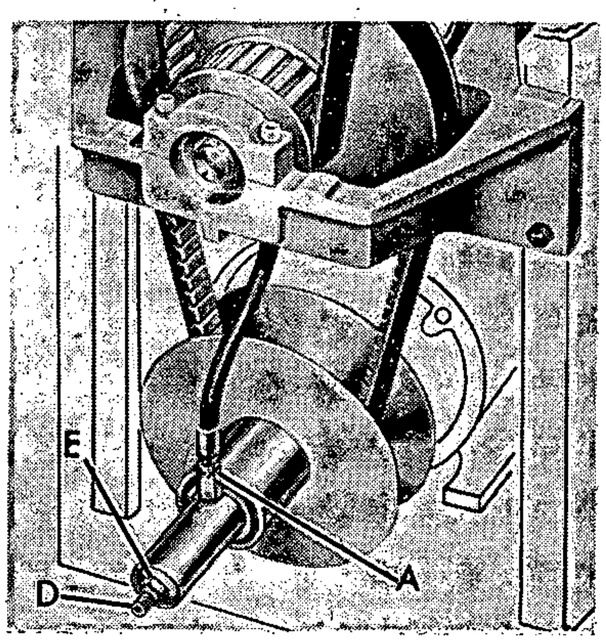

FIGURE 1

NOTE: If lathe is 5900 series with serial number under 502100, disconnect straight fitting on old cylinder and exchange it with elbow fitting on new cylinder.

5. While holding shaft (D, fig. 1) with socket set screw wrench, remove nut (E) and washer.

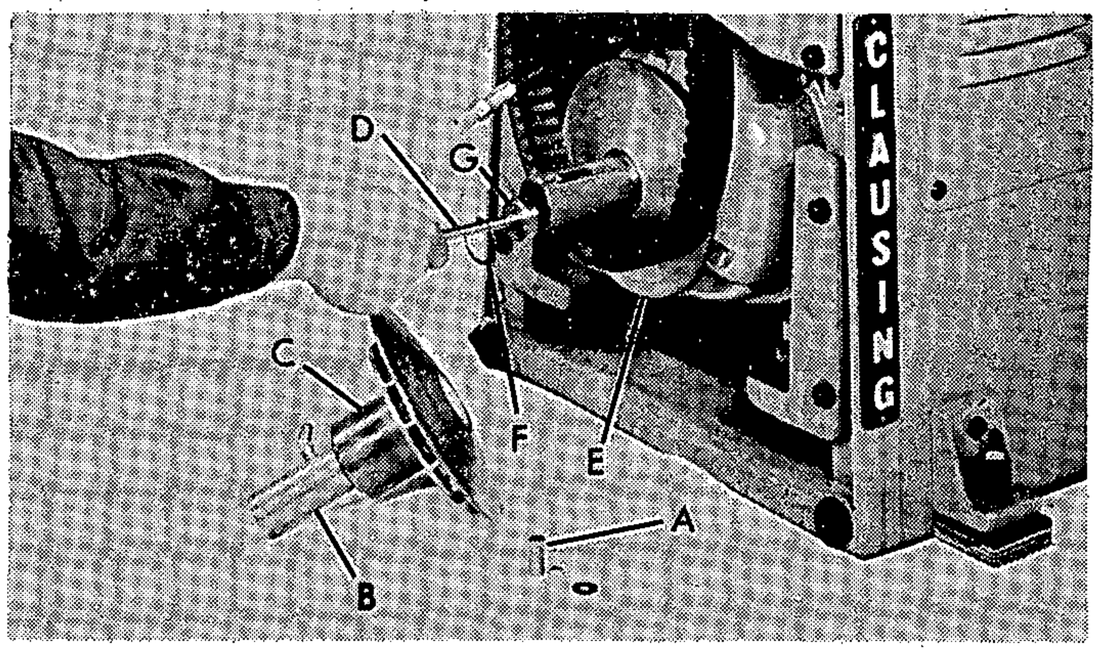

FIGURE 2

6. Remove sleeve (A, fig. 2) from hydraulic cylinder.
7. Pull hydraulic cylinder (B) with outer half of variable pulley (C) off shaft (D).
8. Press hydraulic cylinder (B) with bearing from outer half of variable pulley (C) being sure internal washer in pulley (snap ring on early models) remains in place.

CAUTION: Washer (snap ring on early models) must be in place in outer half of variable pulley (C, fig. 2) before installing bearing and housing assembly (A, fig. 4). An extra washer is supplied to aid in assembly if necessary.

9. With snap ring pliers, remove snap ring (F, fig. 2) from inner half of variably pulley.
10. Remove shaft (D) and bearing (G) from inner half of variable pulley (E).

REPLACING MOTOR VARIABLE PULLEY HYDRAULIC CYLINDER

1. Remove small hydraulic cylinder cover from lower guard and increase the size of the rectangular opening to dimensions in figure 3.

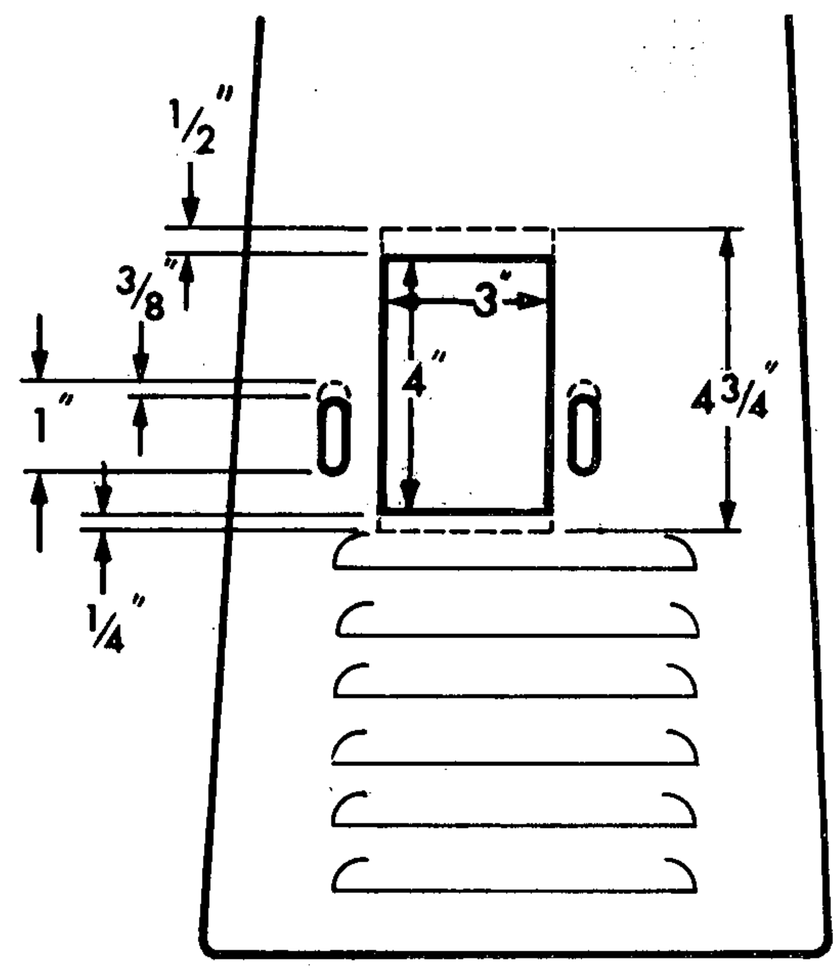

5900 AND 6900 SERIES LATHES
FIGURE 3

NOTE: On 5900 series lathes under serial number 502100, its not necessary to follow step 1 above.

2. Insert new shaft and collar assembly (D, fig. 4) into inner half of variable pulley (E) being sure pin in the collar lines up with key way in pulley (E), secure with retainer ring.

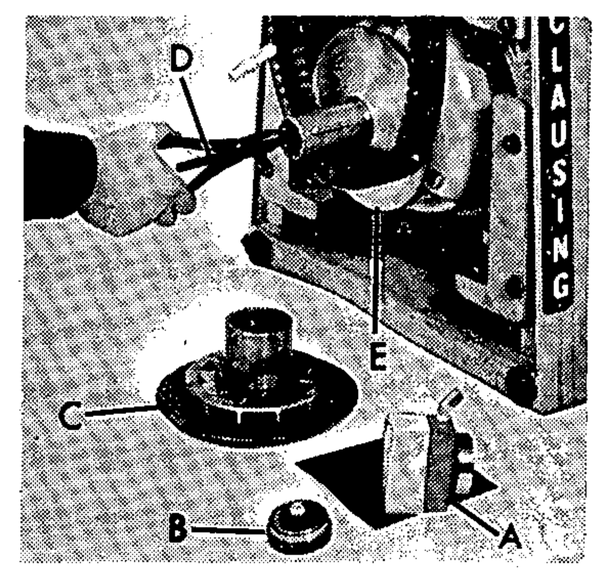

FIGURE 4

3. Press new hydraulic cylinder (A) assembled (less outer bearing assembly B) into outer half of variable pulley (C).

4. Slide outer half of variable pulley (C, fig. 5) with hydraulic cylinder assembly (A) onto shaft (D) and inner half of variable pulley (E) being sure key and key way in pulley line up.

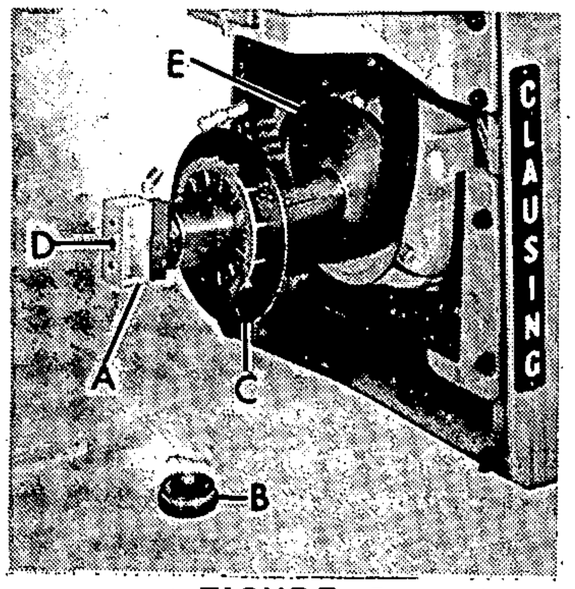

FIGURE 5

5. Slide outer bearing assembly, consisting of bearing holder, outer bearing, bearing spacer and locknut (B, fig. 5) onto shaft (D).

CAUTION: BE SURE HOLES IN BEARING HOLDER LINE UP WITH PISTON PILOTS.

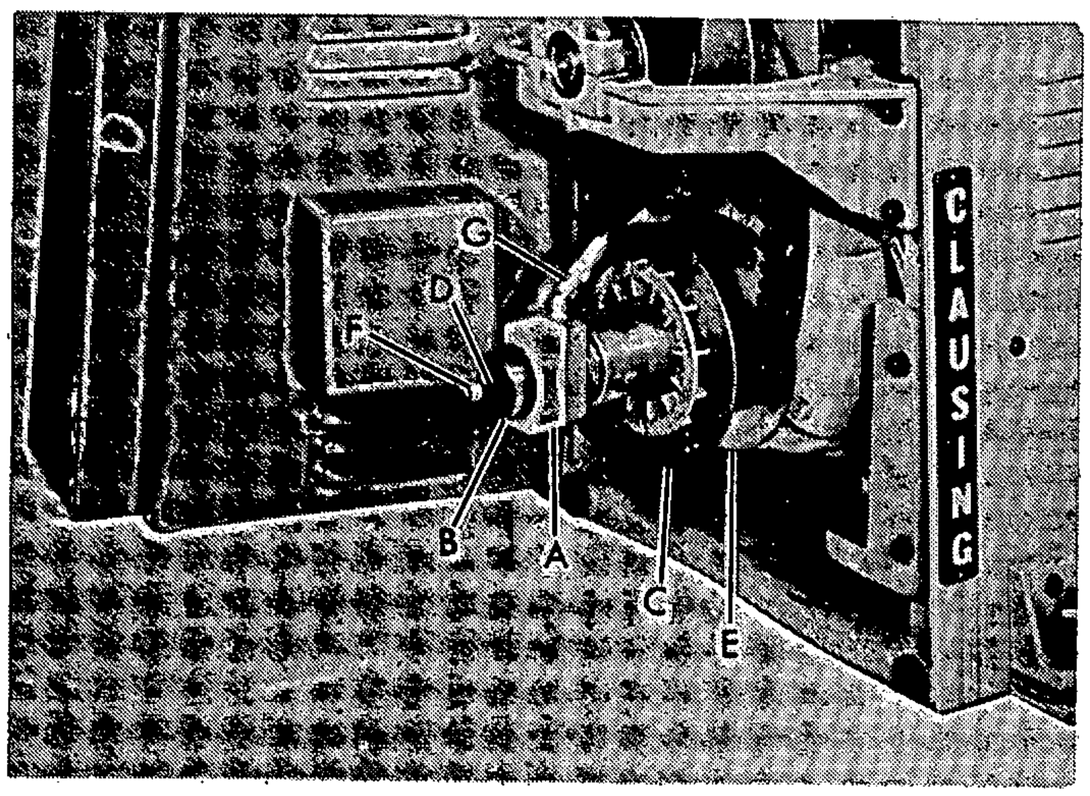

FIGURE 6

6. Hold variable pulley (C, fig. 6) so it will not rotate. Turn locknut (F) until approximately 1/8" of shaft (D) extends beyond locknut.

7. Start fitting (G) onto elbow.

DO NOT TIGHTEN FITTING (G).

8. Fill oil reservoir.

9. Keep oil reservoir filled, turn variable speed dial back to low speed stop and hold until oil runs out around fitting (G).

10. Tighten fitting (G).

11. Start lathe motor. Leave variable control against low speed stop for 30 seconds – turn variable dial to highest speed and bleed air from upper cylinder by loosening small screw on top. Retighten bleeder screw.

CAUTION: LOOSEN SCREW JUST ENOUGH TO ALLOW AIR TO BLEED OUT.

12. Turn variable control back to low speed. Control should stay at setting if air is out of system. If control does not stay at low speed (52/360 rpm) repeat steps 11 and 12.

ADJUSTING VARIABLE DRIVE BELT

1. Turn off lathe.

2. Hold variable pulley (C, fig. 6) so it will not rotate. Turn locknut (F) – clockwise if speed is too low, counterclockwise if speed is too high.

Belt should be flush with outside of motor pulley at high speed and flush with outside of countershaft pulley at low speed.

NOTE: FILE THIS SHEET WITH INSTRUCTION MANUAL FOR USE WHEN ORDERING REPLACEMENT PARTS.

PARTS LIST HYDRAULIC CYLINDER ASSEMBLY 5900 AND 6900 SERIES LATHES

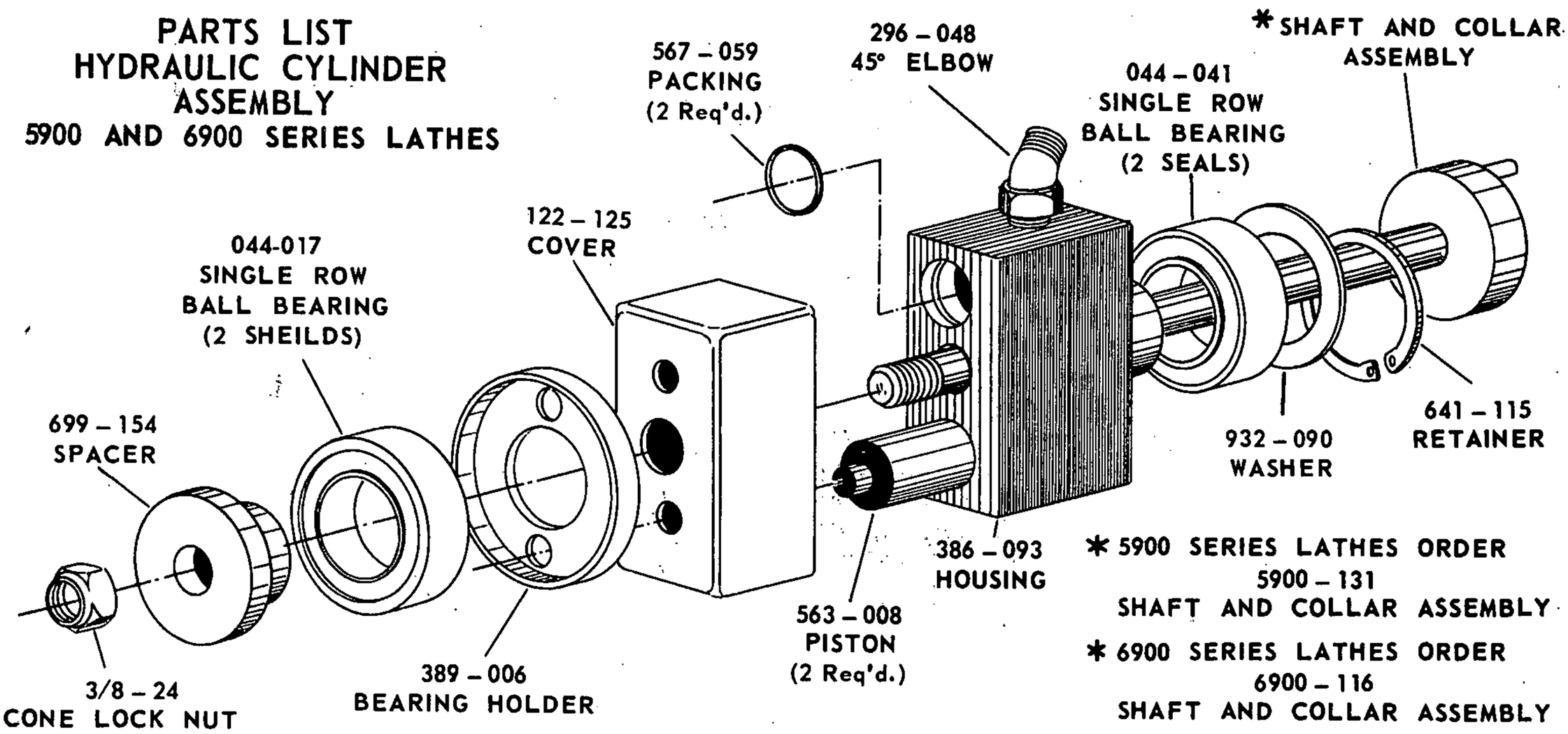

VARIABLE SPEED MOTOR PULLEY ASSEMBLY

6900-87
MOTOR VARI-PULLEY ASSEMBLY

Consists of:

5900 – 124	PULLEY ASSEMBLY
1/4 – 20 x 3/16	SOC. SET SCREW (2)
560 – 138	MOTOR PULLEY ASSEMBLY
442 – 050	KEY

6900-60
PULLEY CYLINDER AND SHAFT ASSEMBLY

Consists of:

5900 – 109	SHAFT ASSEMBLY
6900 – 56	CYLINDER ASSEMBLY
699 – 103	SPACER
567 – 038	"O" RING (2)
044 – 021	BEARING
1/4	WASHER
5/16 – 24	CONE LOK NUT

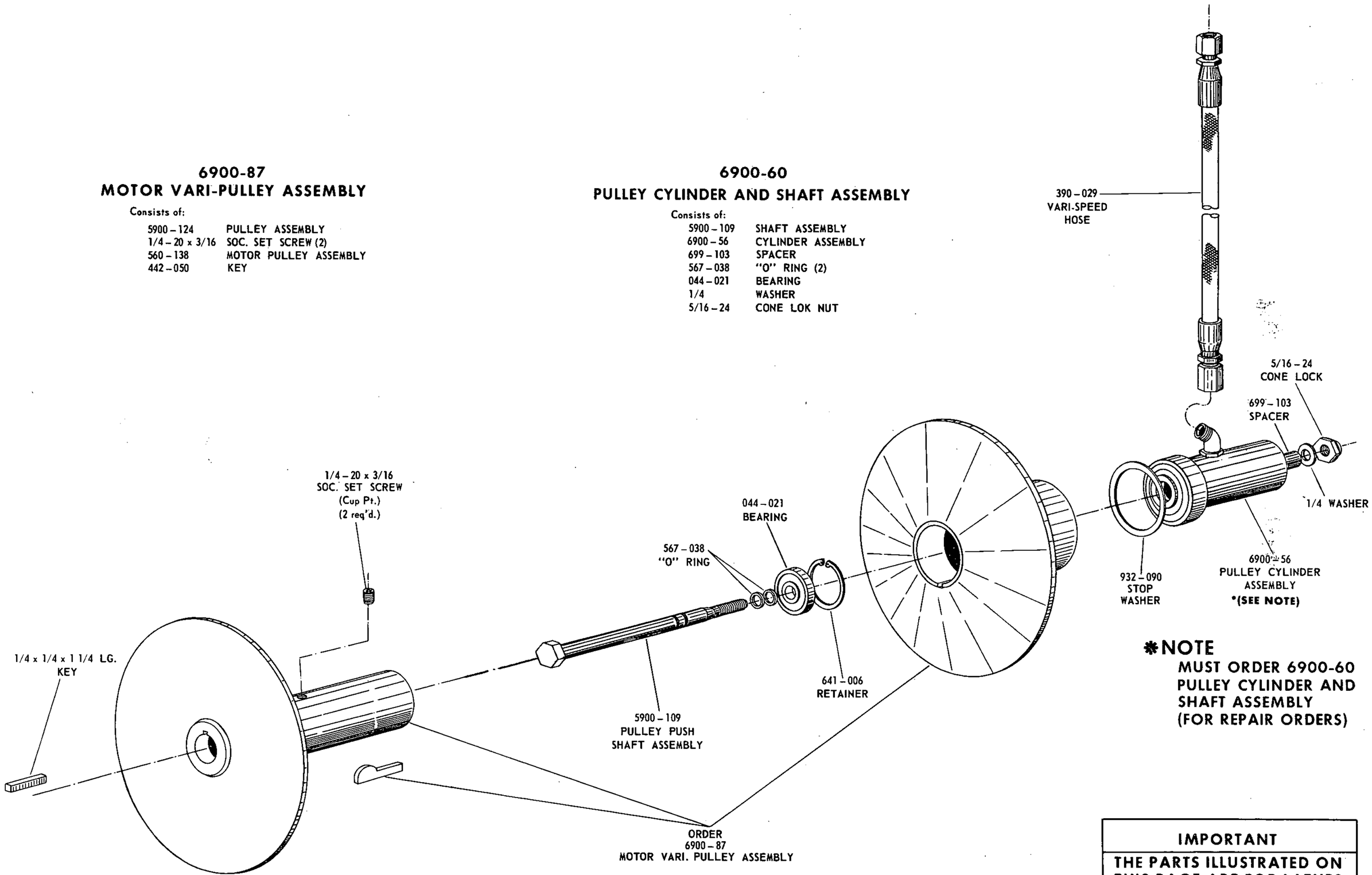

***NOTE**
MUST ORDER 6900-60 PULLEY CYLINDER AND SHAFT ASSEMBLY (FOR REPAIR ORDERS)

IMPORTANT
THE PARTS ILLUSTRATED ON THIS PAGE ARE FOR LATHES SERIAL NUMBERS FROM 600200 TO 602227

COMPOUND AND CROSS SLIDE ASSEMBLY
6900-504

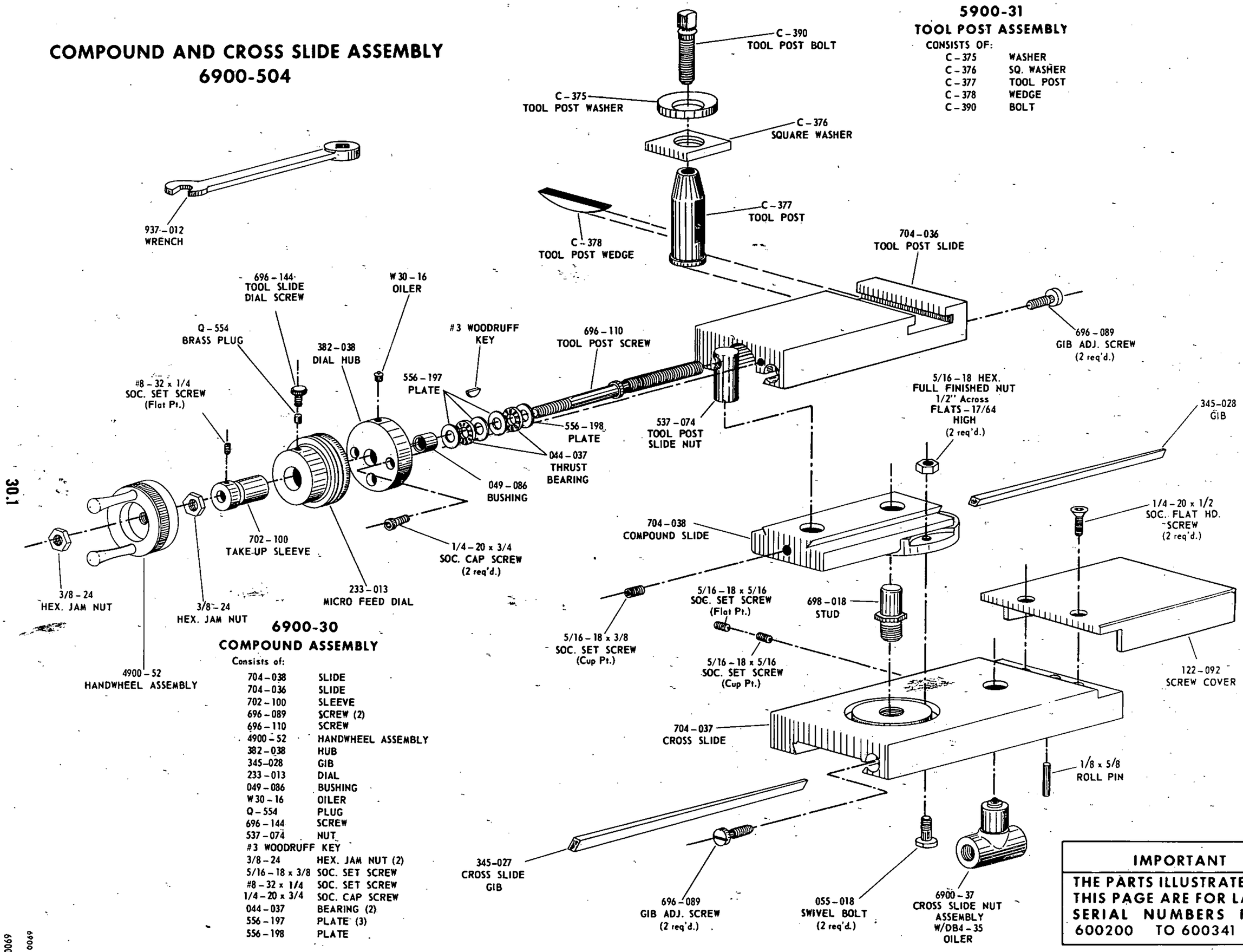

5900-31
TOOL POST ASSEMBLY

CONSISTS OF:

C-375	WASHER
C-376	SQ. WASHER
C-377	TOOL POST
C-378	WEDGE
C-390	BOLT

6900-30
COMPOUND ASSEMBLY

Consists of:

704-038	SLIDE
704-036	SLIDE
702-100	SLEEVE
696-089	SCREW (2)
696-110	SCREW
4900-52	HANDWHEEL ASSEMBLY
382-038	HUB
345-028	GIB
233-013	DIAL
049-086	BUSHING
W30-16	OILER
Q-554	PLUG
696-144	SCREW
537-074	NUT
#3 WOODRUFF	KEY
3/8-24	HEX. JAM NUT (2)
5/16-18 x 3/8	SOC. SET SCREW
#8-32 x 1/4	SOC. SET SCREW
1/4-20 x 3/4	SOC. CAP SCREW
044-037	BEARING (2)
556-197	PLATE (3)
556-198	PLATE

IMPORTANT

THE PARTS ILLUSTRATED ON THIS PAGE ARE FOR LATHES SERIAL NUMBERS FROM 600200 TO 600341

CARRIAGE SADDLE ASSEMBLY
6900-1004

IMPORTANT:
PARTS IN RED ONLY FOR LATHES WITH TAPER ATTACHMENTS

6900-89
CROSS SLIDE SCREW ASSEMBLY

Consists of:

6900 – 88	CROSS SLIDE ASSEMBLY
5900 – 34	FEED SCREW ASSEMBLY
6900 – 53	HANDWHEEL ASSEMBLY
702 – 098	SLEEVE
537 – 089	NUT
233 – 013	DIAL
044 – 036	BEARING
696 – 145	SCREW
M 6 – 226	SHOT
Q – 554	PLUG
W 30	OILER
#3	WOODRUFF KEY
1/2 – 20	ESNA NUT
#8 – 32 x 3/16	SOC. SET SCREW
044 – 036	BEARING
556 – 166	PLATE (2)

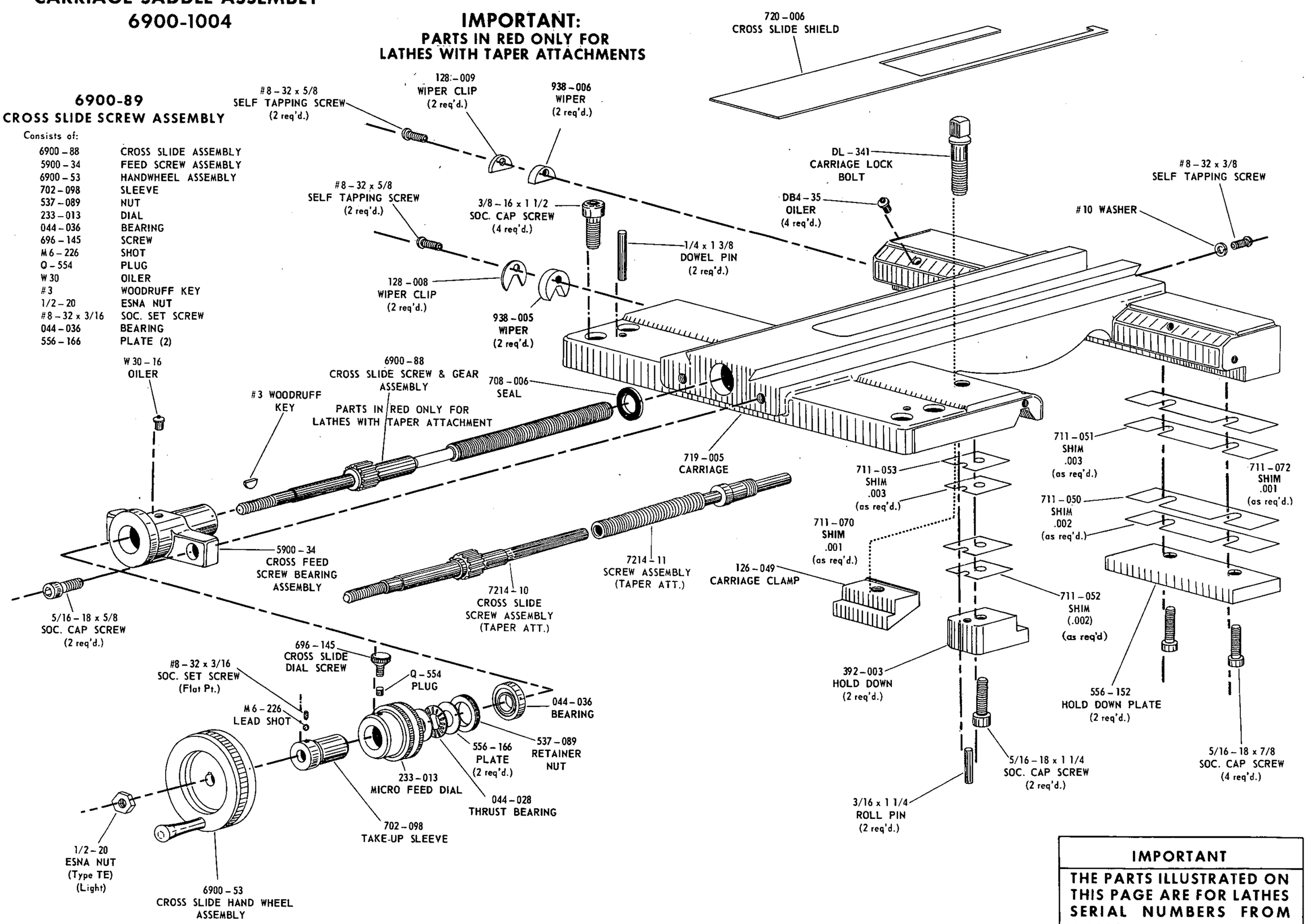

IMPORTANT

THE PARTS ILLUSTRATED ON THIS PAGE ARE FOR LATHES SERIAL NUMBERS FROM 600200

APRON ASSEMBLY
6900-506
INCLUDES PAGE 33

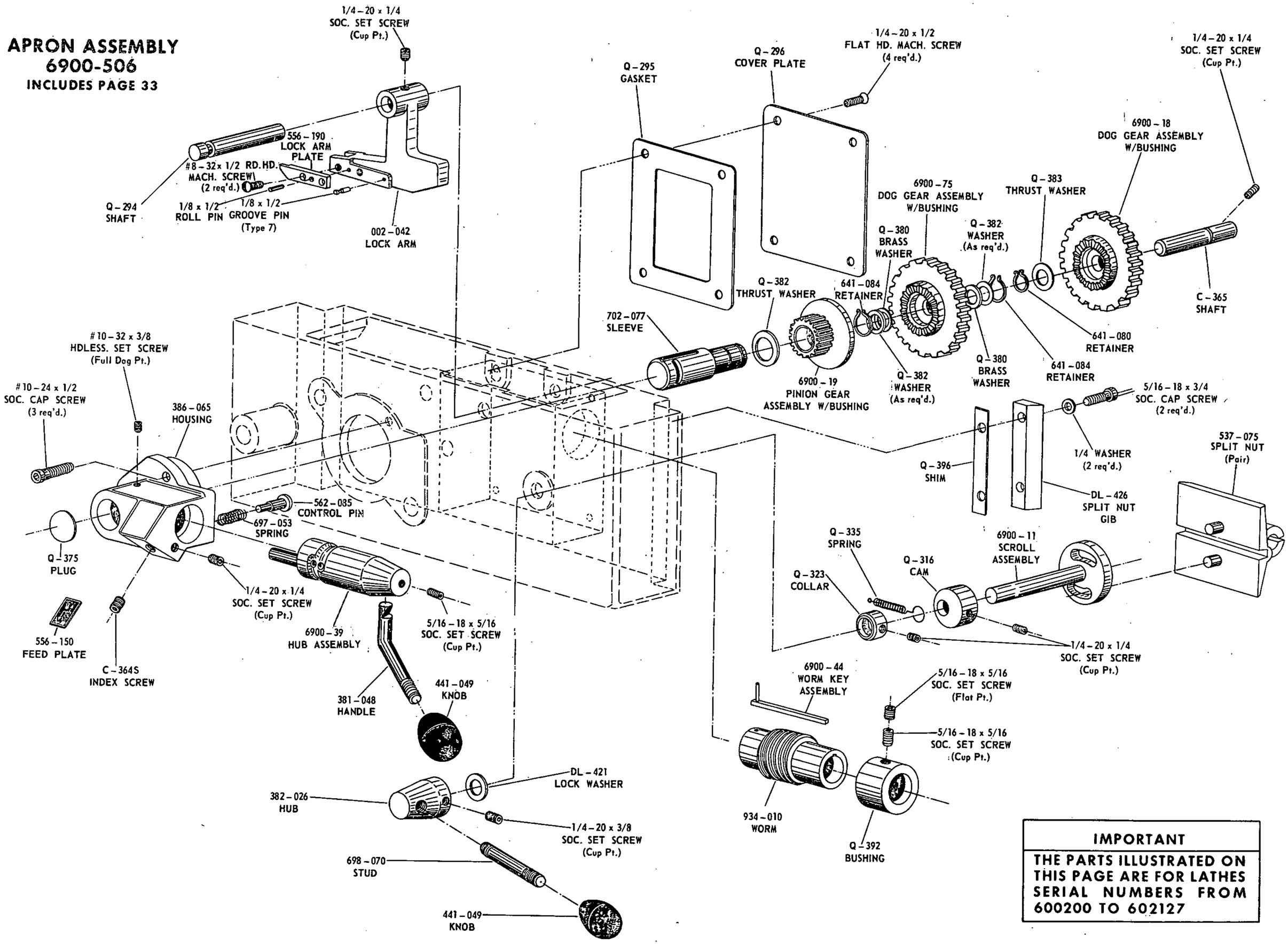

IMPORTANT

THE PARTS ILLUSTRATED ON THIS PAGE ARE FOR LATHES SERIAL NUMBERS FROM 600200 TO 602127

6900-22
RACK PINION GEAR ASSEMBLY

Consists of:

341 – 126	GEAR
382 – 025	GEAR
537 – 065	NUT
556 – 133	PLATE (2)
057 – 009	BALL (6)
932 – 061	WASHER

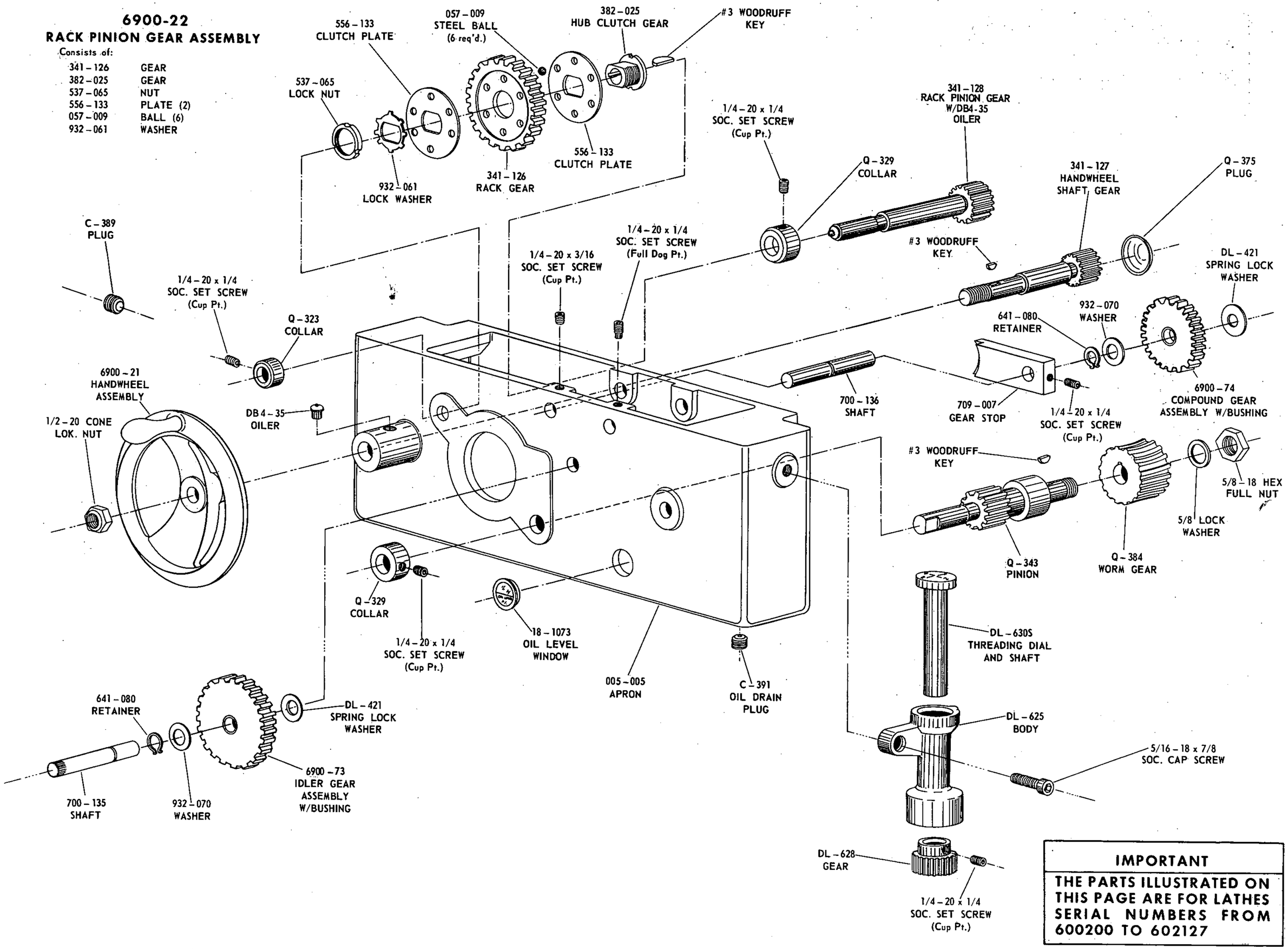

IMPORTANT

THE PARTS ILLUSTRATED ON THIS PAGE ARE FOR LATHES SERIAL NUMBERS FROM 600200 TO 602127

TAILSTOCK ASSEMBLY
6900-509

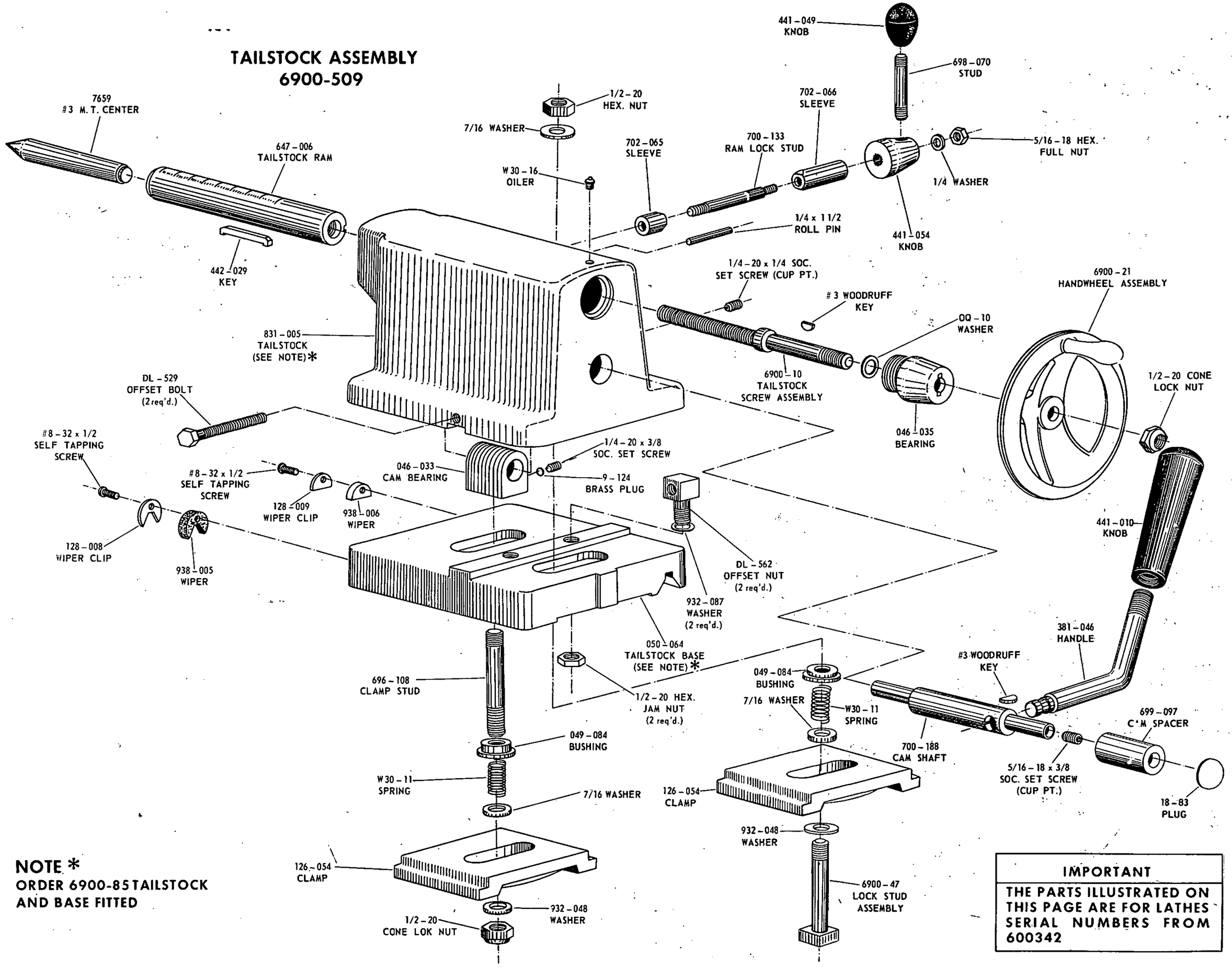

NOTE *
ORDER 6900-85 TAILSTOCK AND BASE FITTED

IMPORTANT
THE PARTS ILLUSTRATED ON THIS PAGE ARE FOR LATHES SERIAL NUMBERS FROM 600342

LATHE ATTACHMENTS

Lathe attachments fall into two general classes: (1) Those which increase speed and accuracy of general lathe operations: (2) Those which equip the lathe to handle work such as milling, grinding, etc., which usually require a single purpose machine.

NO. 7211 FOLLOWER REST

The follower rest provides support for long, slender work mounted between centers.

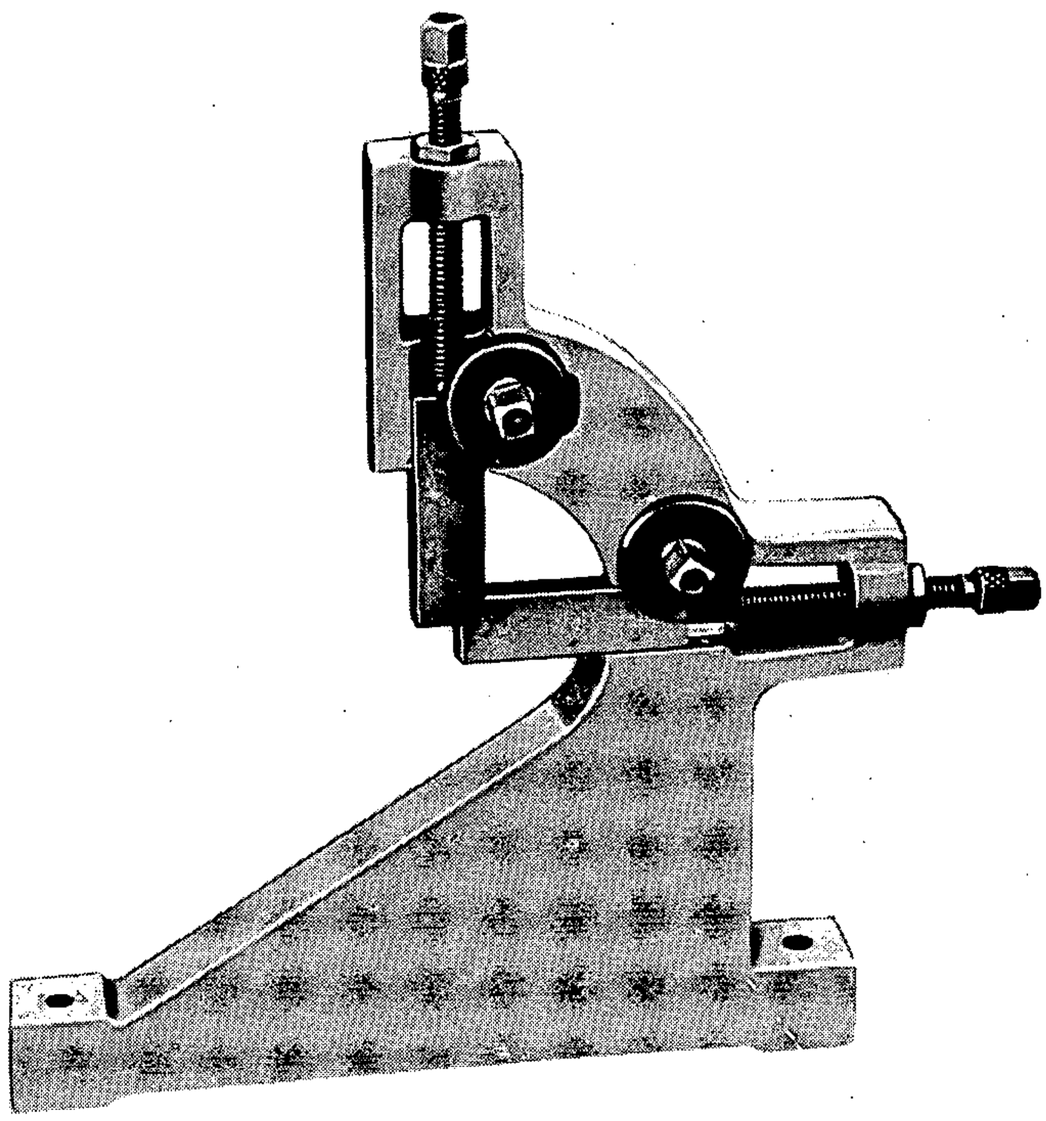

Figure 1

The two adjustable jaws hold the work in rigid position, preventing it from springing away from tool -- refer to figure 1.

The jaws must be accurately positioned to form a true bearing for the work, allowing it to turn freely but without play. The following method is recommended for most work: First, clean saddle dovetail ways. Mount work in lathe, remove the cross feed screw chip guard, and clamp the follower rest to the dovetail. Start the first cut and turn approximately one inch. Adjust both jaws to the turned diameter, making sure they do not bind or twist the work piece -- cellophane paper is sometimes inserted between jaws and work to obtain proper clearance. After both jaws have been properly adjusted, tighten the adjusting screw lock nuts and the jaw clamp screws.

During the cutting operation, apply plenty of lubricant on the work at the point of bearing with the jaws. After each cut the jaws must be adjusted to the new diameter being turned.

NO. 7212 STEADY REST

The steady rest supports long work during turning, boring or threading operations.

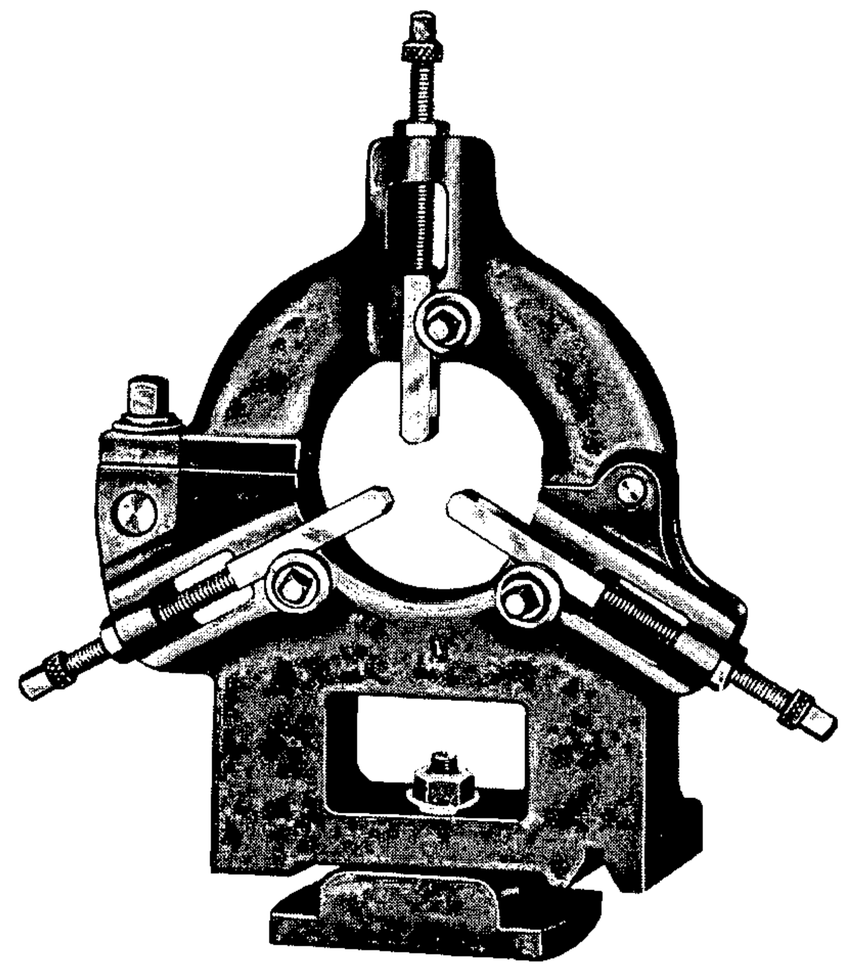

Figure 2

The base clamps to the lathe bed ways -- the adjustable jaws form a bearing for the work and hold it in exact position -- refer to figure 2.

Work that is less than 3/4" diameter and machined more than 5 or 6 inches away from headstock should be supported by a steady rest.

Accurate positioning of the steady rest jaws to the work is important. The jaws must form a true bearing for the work, allowing it to turn freely but without play. To install, clean the bed ways, mount work in lathe, then clamp steady rest to lathe bed close to headstock. Adjust bottom jaws first -- then bring top jaw into light contact with work -- cellophane paper is sometimes used between the jaws and the work to obtain proper clearance. After all three jaws have been properly adjusted, tighten the adjusting screw lock nuts and the jaw clamp screws. Slide the steady rest near the point where the work is to be machined and clamp it to the bed.

During the cutting operation, apply plenty of lubricant on the work at the point of bearing with the jaws.

Scoring is usually caused by the top jaw being too tightly clamped, or by lack of oil. Chatter is caused by the top jaw being too loose.

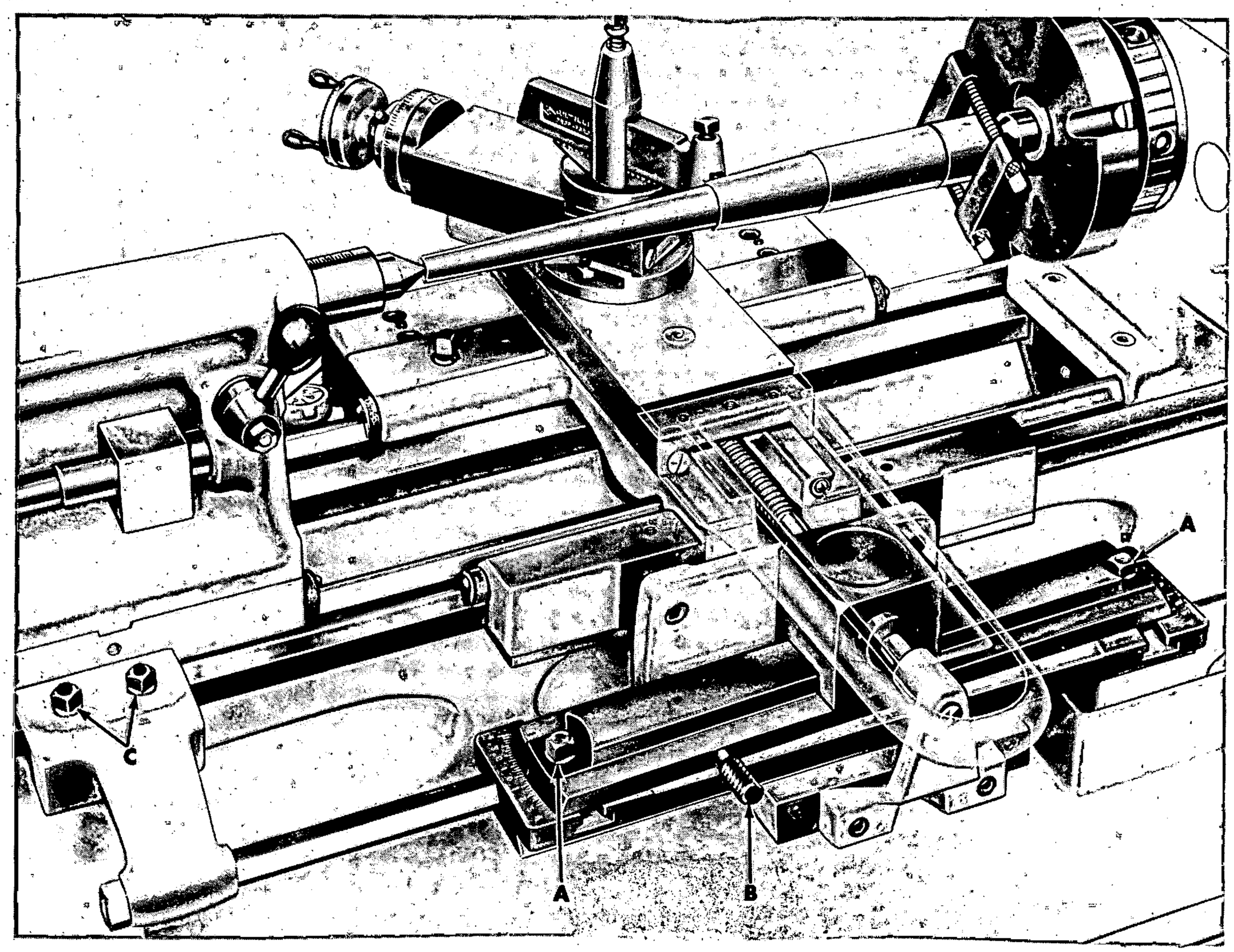

Figure 3

NO. 7114 TELESCOPIC TAPER ATTACHMENT

The Clausing telescopic taper attachment is of sturdy construction, precision machined and easy to operate. Capacity is 4" maximum taper per foot and 10" maximum travel at one setting.

TO OPERATE:

1. Mount work in the lathe – whenever possible the cut should be from the small diameter toward the large diameter.
2. Set point of tool bit on exact center line.
3. Lathe cross slide and taper slide should move freely, but with no up or down play. Adjust the tension with the gib screws in the cross slide and support bracket.
4. Position taper attachment so it is about in the center of the work. Lock clamp bracket to lathe bed.
5. Move the carriage by hand to make sure there is sufficient travel to complete the taper cut. If there isn't, adjust the compound rest, move the carriage or the taper attachment to a different position.
6. Set the taper bar to taper desired – graduations on left end of bar are marked in degrees (graduations indicate included angle) – the right end in inches per foot.
7. To set the attachment for taper desired –
   - A. Loosen the two lock screws (A, fig. 3) on each end of taper bar.
   - B. Turn taper adjusting screw (B) to taper desired.
   - C. Tighten the two taper bar lock screws (A).
   - D. Be sure clamp bracket (C) is locked to lathe bed.
8. Engage feed with tool approximately 1" away from beginning of cut to be sure backlash is removed before tool commences to cut.

Caution: When taper attachment is not in use, loosen clamp (C) so it will slide freely along lathe bed with the movement of the carriage and lock taper bar at zero degrees.

NO. 7208 MICRO CARRIAGE STOP

The carriage stop indicates the proper stopping point of the carriage for accurate duplicate work.

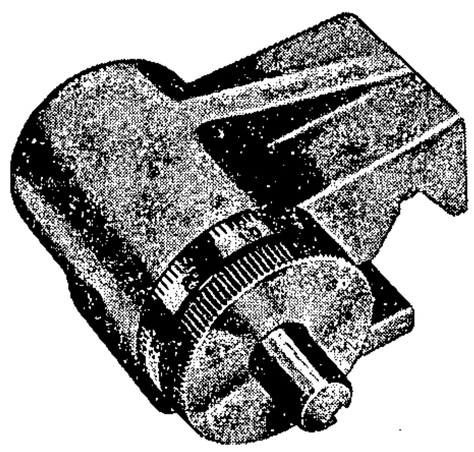

Figure 29

The stop clamps to front bed way of lathe -- clean ways before installing refer to figure 29. Micrometer dial, graduated in thousandths, permits exact settings.

Micro carriage stop does not automatically disengage carriage feed -- carriage should always be fed manually the last part of the cut.

If carriage runs into the stop under power feed, it may break the stop or damage the lathe.

NO. 7204 THREAD CUTTING STOP

The thread cutting stop indicates the proper depth at which to stop the cross feed. It is especially valuable for threading and turning down a rough diameter. The thread cutting stop is mounted on the cross slide dovetail, either in front of or behind the compound rest.

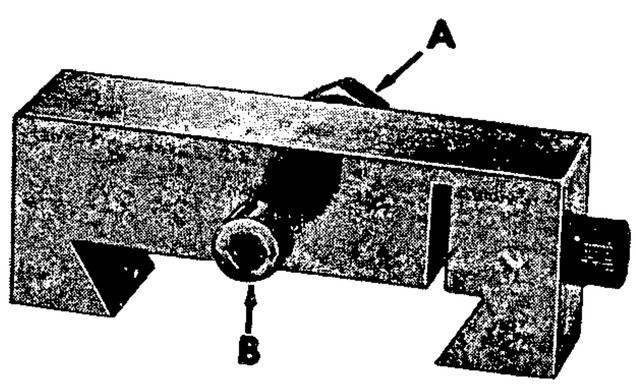

Figure 30

An adjustable screw (B, fig. 30) and lock nut (A) permit accurate setting. In mounting the cross slide stop on the cross slide dovetail, first remove the guard. Then clean the dovetail ways and clamp the stop in the approximate position required. Turn the adjusting screw into exact position and lock with the knurled nut. Place a small piece of paper or cardboard over the cross feed screw to keep it free from dirt and chips during the cutting operation.

During threading operations or whenever the tool is feed in with the compound, the cross feed is used only to back the tool out of the end of each cut. The thread cutting stop, combined with the micrometer graduations of the cross feed control handle on the lathe, assure an accurate "zero" reading before the compound rest feed is advanced for the next cut.

Do not force cross slide against the stop.

NO. 7209 TOOL POST GRINDER

The tool post grinder is used for both external and internal finishing whenever precision and a polished surface are required. Grinder mounts in tool post slide of lathe compound rest.

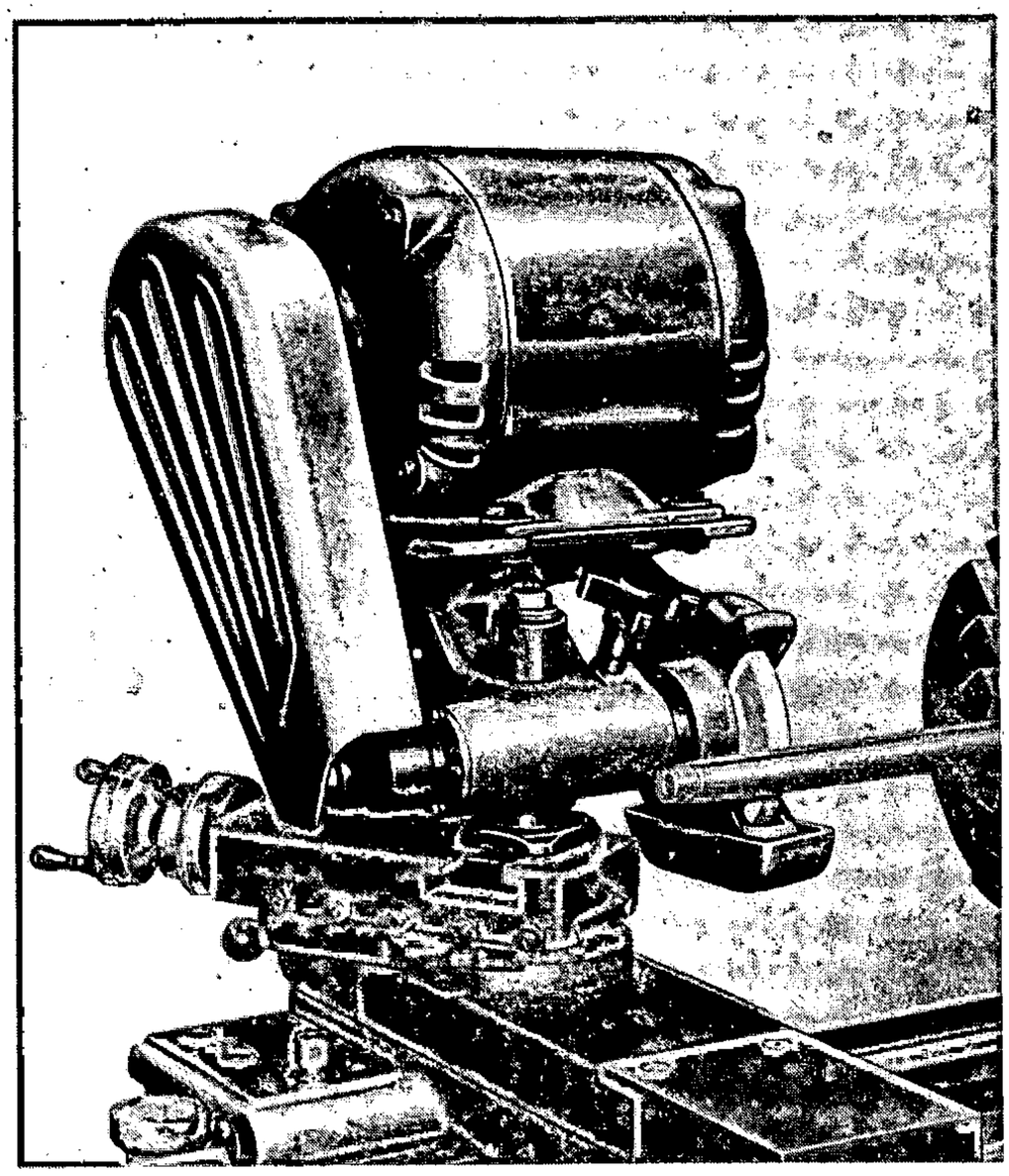

Figure 32

For most operations, grinder spindle is on the exact center line of lathe -- refer to figure 32.

When grinding a surface parallel to lathe center line, set the compound rest at 0 and feed the carriage back and forth by hand or by power feed. When grinding at an angle, the compound rest is set at the proper angle and the grinder is fed back and forth with the compound rest feed.

IMPORTANT: Protect the lathe from grinding dust.

Grinding dust is a mixture of abrasive dust and fine particles of steel. This dust is extremely abrasive -- when allowed to remain on the lathe bed ways and cross slide it can cause rapid wear. Always cover the bed ways and cross slide during grinding operations. After grinding, thoroughly clean the bed ways and carriage dovetails, and apply plenty of clean oil.

Before grinding, dress the wheel.

The dressing tool mounts in a holder clamped to lathe bed.

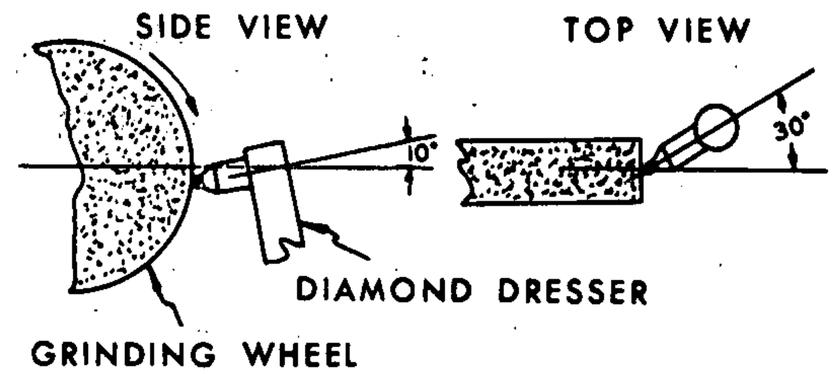

Figure 33

The diamond point should be at an angle and slightly below center as shown in figure 33. Run the wheel back and forth, taking light cuts until the diamond cuts evenly and has removed the glazed surface from the wheel. For a fine, accurate finish, the grinding wheel must be dressed before each operation.

The grinder has two spindle speeds, low speed for external grinding and high speed for internal grinding.

WARNING: *Never run the large grinding wheel at the higher speed -- this speed is for internal grinding wheels only.*

When grinding, work must rotate in a direction opposite that of the grinding wheel.

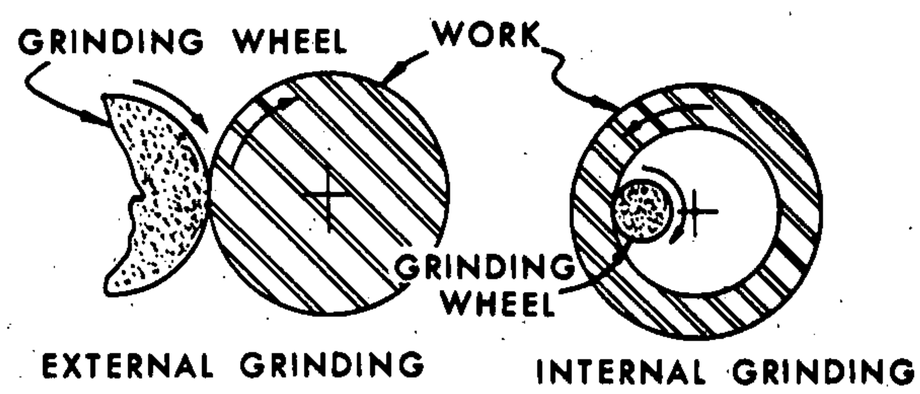

Figure 34

The rotation of the lathe spindle shown in figure 34 must be clockwise (reverse) for external grinding, and counterclockwise (forward) for internal grinding.

External Grinding -- the work should be turned as close to the final finish size as possible before the grinding operation is begun -- grinding is a finishing operation.

With work and grinder in proper position, take light cuts across the entire length of work. The finishing cut should be less than .001 inch.

Internal Grinding -- be sure to remove the external wheel before mounting internal grinding wheel. When grinding internally, take light cuts and feed in very slowly because of overhang of grinding wheel and arbor. After the last cut, allow the wheel to pass back and forth across work several times without advancing feed.